Honeywell
THE POWER OF CONNECTED

Farenhyt™ Series

IFP-75

Addressable Fire Alarm Control Panel

Installation and Operation Guide

Document LS10147-001SK-E Rev: B
09/28/2017 ECN: 17-0555

Fire Alarm & Emergency Communication System Limitations

While a life safety system may lower insurance rates, it is not a substitute for life and property insurance!

An automatic fire alarm system—typically made up of smoke detectors, heat detectors, manual pull stations, audible warning devices, and a fire alarm control panel (FACP) with remote notification capability—can provide early warning of a developing fire. Such a system, however, does not assure protection against property damage or loss of life resulting from a fire.

An emergency communication system—typically made up of an automatic fire alarm system (as described above) and a life safety communication system that may include an autonomous control unit (ACU), local operating console (LOC), voice communication, and other various interoperable communication methods—can broadcast a mass notification message. Such a system, however, does not assure protection against property damage or loss of life resulting from a fire or life safety event.

The Manufacturer recommends that smoke and/or heat detectors be located throughout a protected premises following the recommendations of the National Fire Protection Association Standard 72 (NFPA 72), manufacturer's recommendations, State and local codes, and the recommendations contained in the Guide for Proper Use of System Smoke Detectors, which is made available at no charge to all installing dealers. This document can be found at http://www.systemsensor.com/appguides/. A study by the Federal Emergency Management Agency (an agency of the United States government) indicated that smoke detectors may not go off in as many as 35% of all fires. While fire alarm systems are designed to provide early warning against fire, they do not guarantee warning or protection against fire. A fire alarm system may not provide timely or adequate warning, or simply may not function, for a variety of reasons:

Smoke detectors may not sense fire where smoke cannot reach the detectors such as in chimneys, in or behind walls, on roofs, or on the other side of closed doors. Smoke detectors also may not sense a fire on another level or floor of a building. A second-floor detector, for example, may not sense a first-floor or basement fire.

Particles of combustion or "smoke" from a developing fire may not reach the sensing chambers of smoke detectors because:

- Barriers such as closed or partially closed doors, walls, chimneys, even wet or humid areas may inhibit particle or smoke flow.
- Smoke particles may become "cold," stratify, and not reach the ceiling or upper walls where detectors are located.
- Smoke particles may be blown away from detectors by air outlets, such as air conditioning vents.
- Smoke particles may be drawn into air returns before reaching the detector.

The amount of "smoke" present may be insufficient to alarm smoke detectors. Smoke detectors are designed to alarm at various levels of smoke density. If such density levels are not created by a developing fire at the location of detectors, the detectors will not go into alarm.

Smoke detectors, even when working properly, have sensing limitations. Detectors that have photoelectronic sensing chambers tend to detect smoldering fires better than flaming fires, which have little visible smoke. Detectors that have ionizing-type sensing chambers tend to detect fast-flaming fires better than smoldering fires. Because fires develop in different ways and are often unpredictable in their growth, neither type of detector is necessarily best and a given type of detector may not provide adequate warning of a fire.

Smoke detectors cannot be expected to provide adequate warning of fires caused by arson, children playing with matches (especially in bedrooms), smoking in bed, and violent explosions (caused by escaping gas, improper storage of flammable materials, etc.).

Heat detectors do not sense particles of combustion and alarm only when heat on their sensors increases at a predetermined rate or reaches a predetermined level. Rate-of-rise heat detectors may be subject to reduced sensitivity over time. For this reason, the rate-of-rise feature of each detector should be tested at least once per year by a qualified fire protection specialist. Heat detectors are designed to protect property, not life.

IMPORTANT! Smoke detectors must be installed in the same room as the control panel and in rooms used by the system for the connection of alarm transmission wiring, communications, signaling, and/or power. If detectors are not so located, a developing fire may damage the alarm system, compromising its ability to report a fire.

Audible warning devices such as bells, horns, strobes, speakers and displays may not alert people if these devices are located on the other side of closed or partly open doors or are located on another floor of a building. Any warning device may fail to alert people with a disability or those who have recently consumed drugs, alcohol, or medication. Please note that:

- An emergency communication system may take priority over a fire alarm system in the event of a life safety emergency.
- Voice messaging systems must be designed to meet intelligibility requirements as defined by NFPA, local codes, and Authorities Having Jurisdiction (AHJ).
- Language and instructional requirements must be clearly disseminated on any local displays.
- Strobes can, under certain circumstances, cause seizures in people with conditions such as epilepsy.
- Studies have shown that certain people, even when they hear a fire alarm signal, do not respond to or comprehend the meaning of the signal. Audible devices, such as horns and bells, can have different tonal patterns and frequencies. It is the property owner's responsibility to conduct fire drills and other training exercises to make people aware of fire alarm signals and instruct them on the proper reaction to alarm signals.
- In rare instances, the sounding of a warning device can cause temporary or permanent hearing loss.

A life safety system will not operate without any electrical power. If AC power fails, the system will operate from standby batteries only for a specified time and only if the batteries have been properly maintained and replaced regularly.

Equipment used in the system may not be technically compatible with the control panel. It is essential to use only equipment listed for service with your control panel.

Telephone lines needed to transmit alarm signals from a premises to a central monitoring station may be out of service or temporarily disabled. For added protection against telephone line failure, backup radio transmission systems are recommended.

The most common cause of life safety system malfunction is inadequate maintenance. To keep the entire life safety system in excellent working order, ongoing maintenance is required per the manufacturer's recommendations, and UL and NFPA standards. At a minimum, the requirements of NFPA 72 shall be followed. Environments with large amounts of dust, dirt, or high air velocity require more frequent maintenance. A maintenance agreement should be arranged through the local manufacturer's representative. Maintenance should be scheduled as required by National and/or local fire codes and should be performed by authorized professional life safety system installers only. Adequate written records of all inspections should be kept.

Limit-D2-2016

Installation Precautions

Adherence to the following will aid in problem-free installation with long-term reliability:

WARNING - Several different sources of power can be connected to the fire alarm control panel. Disconnect all sources of power before servicing. Control unit and associated equipment may be damaged by removing and/or inserting cards, modules, or interconnecting cables while the unit is energized. Do not attempt to install, service, or operate this unit until manuals are read and understood.

CAUTION - System Re-acceptance Test after Software Changes: To ensure proper system operation, this product must be tested in accordance with NFPA 72 after any programming operation or change in site-specific software. Re-acceptance testing is required after any change, addition or deletion of system components, or after any modification, repair or adjustment to system hardware or wiring. All components, circuits, system operations, or software functions known to be affected by a change must be 100% tested. In addition, to ensure that other operations are not inadvertently affected, at least 10% of initiating devices that are not directly affected by the change, up to a maximum of 50 devices, must also be tested and proper system operation verified.

This system meets NFPA requirements for operation at 0-49º C/ 32-120º F and at a relative humidity . However, the useful life of the system's standby batteries and the electronic components may be adversely affected by extreme temperature ranges and humidity. Therefore, it is recommended that this system and its peripherals be installed in an environment with a normal room temperature of 15-27º C/60-80º F.

Verify that wire sizes are adequate for all initiating and indicating device loops. Most devices cannot tolerate more than a 10% I.R. drop from the specified device voltage.

Like all solid state electronic devices, this system may operate erratically or can be damaged when subjected to lightning induced transients. Although no system is completely immune from lightning transients and interference, proper grounding will reduce susceptibility. Overhead or outside aerial wiring is not recommended, due to an increased susceptibility to nearby lightning strikes. Consult with the Technical Services Department if any problems are anticipated or encountered.

Disconnect AC power and batteries prior to removing or inserting circuit boards. Failure to do so can damage circuits.

Remove all electronic assemblies prior to any drilling, filing, reaming, or punching of the enclosure. When possible, make all cable entries from the sides or rear. Before making modifications, verify that they will not interfere with battery, transformer, or printed circuit board location.

Do not tighten screw terminals more than 9 in-lbs. Over-tightening may damage threads, resulting in reduced terminal contact pressure and difficulty with screw terminal removal.

This system contains static-sensitive components. Always ground yourself with a proper wrist strap before handling any circuits so that static charges are removed from the body. Use static suppressive packaging to protect electronic assemblies removed from the unit.

Follow the instructions in the installation, operating, and programming manuals. These instructions must be followed to avoid damage to the control panel and associated equipment. FACP operation and reliability depend upon proper installation.

Precau-D1-9-2005

FCC Warning

WARNING: This equipment generates, uses, and can radiate radio frequency energy and if not installed and used in accordance with the instruction manual may cause interference to radio communications. It has been tested and found to comply with the limits for class A computing devices pursuant to Subpart B of Part 15 of FCC Rules, which is designed to provide reasonable protection against such interference when devices are operated in a commercial environment. Operation of this equipment in a residential area is likely to cause interference, in which case the user will be required to correct the interference at his or her own expense.

Canadian Requirements

This digital apparatus does not exceed the Class A limits for radiation noise emissions from digital apparatus set out in the Radio Interference Regulations of the Canadian Department of Communications.

Le present appareil numerique n'emet pas de bruits radioelectriques depassant les limites applicables aux appareils numeriques de la classe A prescrites dans le Reglement sur le brouillage radioelectrique edicte par le ministere des Communications du Canada.

Farenhyt™ is a trademark; and **eVance®, Honeywell®**, **Silent Knight®** and **SWIFT®** are registered trademarks of Honeywell International Inc. **Microsoft®** and **Windows®** are registered trademarks of the Microsoft Corporation. **Chrome™** and **Google™** are trademarks of Google Inc. **Firefox®** is a registered trademark of The Mozilla Foundation.

©2018 by Honeywell International Inc. All rights reserved. Unauthorized use of this document is strictly prohibited.

Software Downloads

In order to supply the latest features and functionality in fire alarm and life safety technology to our customers, we make frequent upgrades to the embedded software in our products. To ensure that you are installing and programming the latest features, we strongly recommend that you download the most current version of software for each product prior to commissioning any system. Contact Technical Support with any questions about software and the appropriate version for a specific application.

Documentation Feedback

Your feedback helps us keep our documentation up-to-date and accurate. If you have any comments or suggestions about our online Help or printed manuals, you can email us.

Please include the following information:

- Product name and version number (if applicable)
- Printed manual or online Help
- Topic Title (for online Help)
- Page number (for printed manual)
- Brief description of content you think should be improved or corrected
- Your suggestion for how to correct/improve documentation

Send email messages to:

FireSystems.TechPubs@honeywell.com

Please note this email address is for documentation feedback only. If you have any technical issues, please contact Technical Services.

Contents

Section 1: Introduction 10
1.1: Overview of Basic System 10
1.1.1: Hardware Features 10
1.1.2: Network System Hardware Features 10
1.1.3: Software Features 10
1.2: About this Manual 10
1.2.1: Terms Used in this Manual 11
1.3: Compatible Products 11

Section 2: Agency Listings, Approvals, and Requirements 14
2.1: Federal Communications Commission (FCC) 14
2.2: Underwriters Laboratories (UL) 15
2.2.1: Requirements for All Installations 15
2.2.2: Requirements for Central Station Fire Alarm Systems 15
2.2.3: Requirements for Local Protected Fire Alarm Systems 15
2.2.4: Requirements for Remote Station Protected Fire Alarm Systems 15
2.2.5: Requirements for the Installation of Carbon Monoxide (CO) Detection and Warning Equipment, NFPA 720 15
2.2.6: NFPA Requirements 16

Section 3: Before You Begin Installing 18
3.1: Inventory 18
3.2: Environmental Specifications 18
3.3: Software Downloads 18
3.4: Electrical Specifications 18
3.5: Wiring Specifications 19
3.6: Board Assembly Diagram 21
3.7: Calculating Current Draw and Standby Battery 21
3.7.1: Current Draw Worksheet Requirements 21
3.7.2: Current Draw Worksheet for IDP SLC Devices 22
3.7.3: Current Draw Worksheet for SK SLC Devices 25
3.7.4: Current Draw Worksheet for SD SLC Devices 29

Section 4: Control Panel Installation 32
4.1: Mounting the Control Panel Cabinet 32
4.1.1: Preventing Water Damage 32
4.1.2: Removing the IFP-75 Assembly from the Housing 32
4.1.3: Dead Front Installation and removal 32
4.2: AC Connection 33
4.3: Battery Power 34
4.3.1: Battery Accessory Cabinet 35
4.4: SBUS Wiring 36
4.4.1: Calculating Wiring distance for SBUS modules 36
4.4.2: Wiring Configurations 38
4.5: RA-100 Remote Annunciator Installation 39
4.5.1: Mounting the RA-100 39
4.5.2: RA-100 Connection to the Panel 42
4.6: RA-1000 Remote Annunciator Installation 42
4.6.1: Mounting the RA-1000 43
4.7: RA-2000 Remote Annunciator Installation 46
4.7.1: Mounting the RA-2000 46
4.7.2: RA-2000 Connection to the Panel 49
4.8: 5824 Serial/Parallel Printer Interface Module Installation 49
4.8.1: Selecting 5824 Options 50
4.9: 5880 LED Driver Module 51
4.9.1: 5880 Board Layout 51
4.9.2: FACP Connection 52
4.9.3: LED Wiring 52
4.9.4: Dry Contact Wiring 53
4.10: 5865-3 / 5865-4 LED Annunciator Installation 54
4.10.1: FACP Connection 55
4.10.2: 5865 Mounting 55
4.11: Configuring Modules 56

4.11.1: Assigning Module IDs 56
4.12: Telephone Connection 56
4.13: Notification Appliance/Auxiliary Power Circuits 57
4.13.1: Conventional Notification Appliance 57
4.13.2: Auxiliary Power Installation 58
4.14: On-Board Relays (Conventional) 59
4.14.1: Common Trouble Relay 59
4.14.2: Programmable Relays 60
4.15: Remote Station Applications 60
4.15.1: Keltron Model 3158 Installation 60
4.15.2: City Box Connection Using the 5220 Module 60
4.15.3: NFPA 72 Polarity Reversal 61
4.15.4: Using a MR-201/T Control Relay From Air Products 63
4.15.5: Transmitter Activated by Dry Contacts 64

Section 5: Networking 66
5.1: Network System Hardware Features 66
5.1.1: Networked Panels 66
5.1.2: Wiring Options to Connect Networked Panels 66
5.2: Direct Connect Wiring Option 66
5.3: SK-NIC Wiring Options 67
5.3.1: Fiber Loop Modules 67
5.3.2: SK-NIC Installation 68
5.4: Setting the Panel ID for each Panel Network 73

Section 6: Network Management 74
6.1: Network Diagnostics 74
6.1.1: Ping Panel 74
6.1.2: Data Network Status 74
6.2: Network Programming 74
6.2.1: Learn Network 74
6.2.2: Edit Network Names 74
6.2.3: Edit Panel ID 74
6.2.4: Computer Access 75
6.2.5: Access Codes 75
6.2.6: Communicator Options 76
6.3: Sync Network Options 77
6.4: Network Management Quick Reference 79

Section 7: IDP, SK, SD and SWIFT™SLC Device Installation 82
7.1: List of IDP SLC Devices 82
7.2: List of SK SLC Devices 83
7.3: List of SD SLC Devices 84
7.4: SWIFT® Wireless SLC Devices 84
7.5: Maximum Number of Devices 84
7.6: Wiring Requirements for SLC Devices 84
7.6.1: Wire Sizing for Internal SLC 85
7.6.2: Wiring Requirements for IDP or SK Modules 85
7.6.3: Wiring SLC in Class A Configuration 86
7.7: Addressing IDP/SK SLC Devices 87
7.8: SD Detector Installation 87
7.9: Addressing SD SLC Devices 87
7.9.1: SLC Devices with DIP Switches 88
7.10: Wiring the WIDP-WGI or SK-WGI. 89
7.10.1: SLC Connections 89

Section 8: Programming Overview 90
8.1: JumpStart® AutoProgramming 90
8.1.1: Input Points 90
8.1.2: Output Points 90
8.1.3: Running JumpStart AutoProgramming 90
8.2: Mapping Overview 91
8.2.1: Input Point Mapping 92
8.2.2: Output Circuit Mapping 93

8.2.3: Event Mapping....93
8.2.4: Mapping LED Points....96
8.3: Programming Using the HFSS Software Suite....96
8.4: Programming Using an Annunciator....96
8.4.1: Entering / Exiting the Program Menu....97
8.4.2: Moving through the Menus....97
8.4.3: Selecting Options and Entering Data....97
8.5: Programming Menu Quick Reference....98
Section 9: Programming....106
9.1: UL 864 Programming Requirements....106
9.2: Modules....106
9.2.1: Edit Modules....106
9.2.2: Adding a Module....107
9.2.3: Deleting a Module....107
9.2.4: View Module List....107
9.3: Zone....107
9.3.1: Edit Zone....107
9.3.2: View Zone Points....110
9.4: Group....110
9.4.1: Edit Group....110
9.4.2: View Group Points....111
9.4.3: Edit OPG Template....111
9.5: Point....111
9.5.1: Point Programming For SLC....111
9.5.2: Point Programming For Internal or External Power Module....114
9.5.3: Point Programming For 5880 and 5865 Modules....115
9.6: System Options....116
9.6.1: Communication Options....116
9.6.2: Daytime/Nighttime Sensitivity....119
9.6.3: Holiday Days....119
9.6.4: Time Options....120
9.6.5: Miscellaneous Options....121
9.6.6: Daylight Saving Options....121
9.6.7: Edit Banner....122
9.6.8: SLC Family....122
9.7: JumpStart® Autoprogramming....123
9.8: Restore Defaults....123
Section 10: System Operation....124
10.1: User and Installer Default Codes:....124
10.2: Annunciator Description....124
10.2.1: LCD Display....124
10.2.2: Banner....124
10.2.3: Single Key Acknowledge....124
10.3: Menu System....125
10.3.1: Main Menu Overview....125
10.3.2: Using the Menus....125
10.4: Basic Operation....125
10.4.1: Setting Time and Date....125
10.4.2: Disable / Enable a Point....125
10.4.3: View Event History....126
10.4.4: Conduct a Fire Drill....126
10.4.5: Conduct an Indicator Test....126
10.4.6: Conduct a Walk Test....126
10.4.7: Conduct a Communicator Test....127
10.4.8: Manual AlarmNet Registration....127
10.4.9: Silence Alarms or Troubles....127
10.4.10: Reset alarms....127
10.4.11: Check Detector Sensitivity Through Point Status....127
10.4.12: View Status of a Point....128
10.4.13: View Alarms, Supervisories or Troubles....128
10.4.14: View System Information....128

10.5: Operation Mode Behavior 129
10.6: Operation Mode Behavior 130
10.6.1: Multi-Site Annunciator and Multi-Site User Access 132
10.7: Releasing Operations 132
10.7.1: Single Interlock Zone Releasing 133
10.7.2: Double Interlock Zone Releasing 134
10.8: Smoke Alarm Verification 135
10.9: Function Keys 135
10.9.1: Recording an F-Key Macro 135
10.9.2: Aborting an F-Key Macro Recording Session 136
10.9.3: Erasing an F-Key Macro 136
10.9.4: Using a Recorded F-Key Macro 136
10.9.5: F-Key Status Event 136
10.9.6: F-Key Map Inhibit 136

Section 11: Reporting 138
11.1: Receivers Compatible with the Control Panel 138
11.2: SIA / IFP-75 Panels PI Modifier Reporting: 147
11.3: SIA– IFP-75 Panel Communicator: 148

Section 12: Testing and Troubleshooting 150
12.1: Troubleshooting 150
12.2: Common Problems 150
12.2.1: Periodic Testing And Maintenance 150
12.2.2: Event History 151
12.3: Built-in Troubleshooting and Testing Tools 151
12.3.1: SLC Device Locator 151
12.3.2: SLC Multi Locator 151
12.3.3: I/O Point Control 152
12.4: Earth Fault Resistance 152

Section 13: Installation Records 154
13.1: SD SLC Device Point Record 154
13.2: IDP/SK SLC Device Point Record 154

Appendix A: Compatible Devices 156
A.1: Notification Appliances 156
A.2: Two-Wire Smoke Detectors 163
A.3: Four Wire Smoke Detectors/Devices (UL Listed 165
A.4: Door Holders (UL Listed) 166
A.5: Relays (UL Listed) 166
A.6: Compatible 520Hz Signaling Speakers 167
A.7: Compatible 520Hz Low Frequency Bases 167

Appendix B: Editing Text Using the Built-In Programmer 168
B.8: Characters Used for Editing Text 168
B.9: Example Name Edit 168

Appendix C: Expanded Receiver/Panel Relationship 170

Appendix D: Cadence Patterns 172

Section 1: Introduction

The IFP-75 (red) / IFP-75B (black) are Fire Alarm Control / Communicator is an addressable fire control system that meets the requirements of UL 864.

NOTE: *All references to IFP-75 within this manual are applicable to the IFP-75B.

1.1 Overview of Basic System

1.1.1 Hardware Features

- The IFP-75 panel has one signaling line circuit (SLC) that supports Intelligent Device Protocol (IDP) devices, SK devices or SD protocol devices.
- The control panel's SLC supports 75 IDP or SK detectors and 75 IDP or SK modules or 75 SD protocol devices.
- The IFP-75 is capable of outputting 2.5A of output power during alarm activation through 2 sets of terminals for notification appliance circuits or auxiliary application. Each circuit is power limited per UL 864 and can source up to 2.5A during alarm activation. The constant auxiliary power load must not exceed 1A for normal standby.

NOTE: Total output power for both circuits must not exceed 2.5A in alarm condition, and total output power for both circuits must not exceed 1.0A for all other activation conditions (i.e. Supervisory, Trouble, etc.).

- Built-in dual phone line, digital alarm communicator/transmitter (DACT), IP or optional cellular technologies.
- Reports events to central station by point or by zone.
- UL Listed for pre-action and deluge releasing systems.
- Two general purpose Form C programmable relays.
- One Form C Trouble Relay.
- Basic system operation can be performed from the on-board, or any remote annunciator.
- Up to 20 user profiles can be programmed, each having custom access code, and main menu items.
- Can be used with any combination of up to 8 Model RA-100, RA-1000, or RA-2000 Remote LCD Annunciators (sold separately).
- Can be used with Model 5865-3, 5865-4, and 5880 in any combination for a total of eight devices on one control panel. See Sections Figure 4.9 and Figure 4.10 for additional information on these models.
- Printing of event log available through the Model 5824 serial/parallel printer interface module.
- 125 software zones, 125 output groups.
- Add four Notification/Auxiliary power circuits with each 5496 NAC Expander. See note below.

NOTE: The system can support a maximum of eight intelligent power modules, either the RPS-1000 or 5496, in any combination.

1.1.2 Network System Hardware Features

- The default network setup can contain up to 32- IFP-75 panels connected.
- Network support for up to 32 Sites.
- Each building is referred to as a "site".
- Panels can be interconnected using CLASS B or CLASS A topology.
- Use the SK-NIC Network Interface Card to network. Copper wire or fiber optic cable panel connectivity can be used within the same networked system.
- The network architecture provides true peer to peer capability allowing network survivability for all hardware that remains operational in the event of partial system failure.

1.1.3 Software Features

- Advanced smoke detector features:
  - Automatic drift compensation
  - Maintenance alert region
  - Point status meets calibrated smoke test requirements for NFPA 72
- "JumpStart®" feature for easy programming
- Non-volatile event history stores 1000 events
- A choice of output patterns available for notification outputs, including Temp 4 along with ANSI 3.41 temporal signal
- Built-in synchronization appliance support for AMSECO, Gentex®, Wheelock®, or System Sensor ®

1.2 About this Manual

This manual is intended to be a complete reference for all installation and operation tasks for the IFP-75. Please let us know if the manual does not meet your needs in any way. We value your feedback!

1.2.1 Terms Used in this Manual

The following terminology is used with the IFP-75 system:

Term	Description
SLC	Signaling Line Circuit
Module	The term module is used for all hardware devices except for SLC addressable devices and notification appliances. This includes the IFP-75 panel itself.
Input Point	An addressable sensing device, such as a smoke or heat detector or a contact monitor device.
Input Zone	A protected area made up of input points.
Output Point (or Output Circuit)	A notification point or circuit for notification appliances. Relay circuits and auxiliary power circuits are also considered output points.
Group (or “Output Group”)	A group of output points. Operating characteristics are common to all output points in the group.
Output (or “Cadence”) Pattern	The pattern that the output will use, for example, Constant, March Code, ANSI 3.41. Applies to zones and special system events. See Appendix D for additional information.
Mapping	Mapping is the process of specifying which outputs are activated when certain events occur in the system. Section Figure 8.2 explains mapping in detail.
Network System	Consist of any combination of 32 panels of these model numbers: IFP-75, IFP-300, IFP-300ECS, IFP-2100 or IFP-2100ECS.
SWIFT	Smart Wireless Integrated Fire Technology

Table 1.1 Manual Terminology

1.3 Compatible Products

The chart below lists the products available for use with the IFP-75.

Type of Device	Model	Description
IDP Addressable SLC Devices	See Section Section 7.1 for a list of compatible devices.	
SK Addressable SLC Devices	See Section 7.2 for a list of compatible devices.	
SD Addressable SLC Devices	See Section Section 7.3 for a list of compatible devices.	
SWIFT Wireless SLC Devices	See Section Section 7.4 for a list of compatible devices	

Table 1.2 IFP-75 Compatible Products

Type of Device	Model	Description
Other Modules	5824 Serial/Parallel Printer Interface Module	Allows a printer to be attached for the on-site event logging. Maximum of four 5824s per control panel.
	RPS-1000 Power Supply	Provides additional power, six Flexput circuits, and two Form C relays. Max 8 per system. See RPS-1000 Installation Manual (PN 151153) for more information.
	5496 NAC Expander	Provides 4 additional Notification Appliance Circuits/Auxiliary power. (Up to 8 per IFP-75 system.)
	RA-100 and RA-100R LCD Annunciator	4 x20 Remote LCD annunciator. can be used in any combination, up to a total of 8 devices on one panel.
	RA-1000 and RA-1000R LCD Annunciator	4 x20 Remote LCD annunciator can be used in any combination, up to a total of 8 devices on one panel.
	RA-2000 LCD Annunciator	4 x 40 Remote LCD annunciator can be used in any combination, up to a total of 8 devices on one panel.
	5865-3 and 5865-4 LED Annunciator	LED annunciator can display up to 30 LEDs (15 red and 15 yellow). 5865-4 has key switches for silence and reset, and a system trouble LED. 5865-3, 5865-4, and 5880 can be used in any combination, up to a total of eight devices on one panel.
	RA-100TG and RA-100TR Trim Ring	Trim ring kits for surface mounting the RA-100/RA-100R annunciator. RA-100TG is gray; RA-100TR is red.
	5860TG and 5860TR Trim Ring	Trim ring kits for surface mounting the RA-1000 annunciator. 5860TG is gray; 5860TR is red.
	5880 LED Driver Module	Driver for up to 40 LEDs. Interfaces with customized annunciator boards. In addition the 5880 has eight generic switch input points.
	5883 General Purpose Relay Module	Provides 10 Form C relays. Designed to be driven by the 5880. Up to four, 5883s can be used with each 5880 module.
	SK-NIC	Network Interface Card
	SK-FML	Fiber-Optic Multi Mode
	SK-FSL	Fiber-Optic Single Mode
Wireless	WIDP-WGI	Wireless Gateway
	WIDP-PHOTO	Wireless Photoelectric Smoke Detector with 4" base
	WIDP-ACCLIMATE	Wireless Multi criteria photoelectric smoke detector with thermal (135°F) with 4" base
	WIDP-HEAT-ROR	Wireless heat, ROR/ 135° fixed with 4" base
	WIDP-HEAT	Wireless Heat, 135° fixed with 4" base
	WIDP-MONITOR	Wireless Addressable Monitor module
	WIDP-RELAY	Wireless Addressable Relay module
	B210W	6" wireless base
Wireless	WSK-WGI	Wireless Gateway
	WSK-PHOTO	Wireless photo with 4" base
	WSK-PHOTO-T	Wireless Multi criteria photoelectric smoke detector with thermal (135°F) with 4" base
	WSK-HEAT-ROR	Wireless heat, ROR/ 135° fixed with 4" base
	WSK-HEAT	Wireless Heat, 135° fixed with 4" base
	WSK-MONITOR	Wireless monitor module
	WSK-RELAY	Wireless relay module
	B210W	6" wireless base

Table 1.2 IFP-75 Compatible Products

Type of Device	Model	Description
Misc.	HFSS Honeywell Fire Software Suite	For communication and panel programming with a Windows-based computer. Enables remote viewing of detector status and event history.
	7860 Telephone Cord	RJ31X cord for connecting phone line to the IFP-75.
	7628	UL Listed End-of-line resistor.
	DF-50	Dead Front insert.
	CELL-MOD	Cellular board with Plastic Enclosure
	CELL-CAB-SK	Cellular board with Metal Enclosure, Lock & key

Table 1.2 IFP-75 Compatible Products

Section 2: Agency Listings, Approvals, and Requirements

Install and maintain in accordance with NFPA 72. Detector spacing shall be in accordance to NFPA 72. End-of -line relays and resistors shall be placed within the electrical box located and the end of the initiating circuit. Testing and maintenance should be performed according to NFPA 72.

2.1 Federal Communications Commission (FCC)

The following information must be provided to the telephone company before the IFP-75 can be connected to the phone lines:

A	Manufacturer:	Honeywell
B	Model Number:	IFP-75
C	FCC registration number:	US: HS9AL10A2100
	Ringer equivalence:	1.0A
D	Type of jack:	RJ31X
E	Facility Interface Codes:	Loop Start: 02LS2
F	Service Order Code:	9.0F

1. This device may not be directly connected to coin telephone or party line services.
2. This device cannot be adjusted or repaired in the field. In case of trouble with the device, notify the installing company or return to:

   Honeywell Farenhyt
   12 Clintonville Road
   Northford, CT 06472-1610
   (203) 484-7161
3. If the IFP-75 causes harm to the telephone network, the telephone company will notify the user in advance that temporary discontinuance of service may be required. If advance notice is not practical, the telephone company will notify the user as soon as possible. Users have the right to file complaints, if necessary, with the Federal Communications Commission.
4. The telephone company may make changes in its facilities, equipment, operations, or procedures that could affect the operation of the equipment. If this happens, the telephone company will provide advance notice to allow you to make the necessary modifications to maintain uninterrupted service.

WARNING: FCC RULES PART 15

This device has been verified to comply with FCC Rules Part 15. Operation is subject to the following conditions: (1) This device may not cause radio interference, and (2) This device must accept any interference received, including interference that may cause undesired operation.

a. This equipment complies with Part 68 of the FCC rules and the requirements adopted by the ACTA. On the wiring diagram of this equipment is a label that contains, among other information, a product identifier in the format US: HS9AL10A2100. If requested, this number must be provided to the telephone company.

b. See manual for phone jack information.

c. A plug and jack used to connect this equipment to the premises wiring and telephone network must comply with the applicable FCC Part 68 rules and requirements adopted by the ACTA. A compliant telephone cord and modular plug is provided with this product. It is designed to be connected to a compatible modular jack that is also compliant. See installation instructions for details.

d. The REN (ringer equivalence number) provided on this installation sheet is used to determine the number of devices that may be connected to the public switched telephone network. This number must not exceed 5.0. Since this product has an REN of 1.0A, the number of devices is limited. The REN number is embedded in the FCC registration number as 10A.

e. If this equipment IFP-75 causes harm to the telephone network, the telephone company will notify you in advance that temporary discontinuance of service may be required. But if advance notice isn't practical, the telephone company will notify the customer as soon as possible. Also, you will be advised of your right to file a complaint with the FCC if you believe it is necessary.

f. The telephone company may make changes in its facilities, equipment, operations or procedures that could affect the operation of the equipment. If this happens the telephone company will provide advance notice in order for you to make necessary modifications to maintain uninterrupted service.

g. If trouble is experienced with the IFP-75, for repair or warranty information, please contact Honeywell Silent Knight technical support at 800-446-6444 or www.farenhyt.com. If the equipment is causing harm to the telephone network, the telephone company may request that you disconnect the IFP-75 until the problem has been resolved.

h. See warranty in back of this manual for repair and replacement information.

i. Connection to party line service is subject to state tariffs. Contact the state public utility commission, public service commission or corporation commission for information.

j. If your home has specially wired alarm equipment connected to the telephone line, ensure the installation of this IFP-75 does not disable your alarm equipment. If you have questions about what will disable alarm equipment, consult your telephone company or qualified installer.

■ Electrical Safety Advisory:

Parties responsible for equipment requiring AC power should consider including an advisory notice in their customer information suggesting the customer use a surge arrestor. Telephone companies report that electrical surges, typically lightning transients, are very destructive to customer terminal equipment connected to AC power sources. This has been identified as a major nationwide problem.

CAUTION: INSTALLATION AND TEST

TO ENSURE PROPER OPERATION, THIS EQUIPMENT MUST BE INSTALLED ACCORDING TO THE ENCLOSED INSTALLATION INSTRUCTIONS. TO VERIFY THAT THE EQUIPMENT IS OPERATING PROPERLY AND CAN SUCCESSFULLY REPORT AN ALARM, THIS EQUIPMENT MUST BE TESTED IMMEDIATELY AFTER INSTALLATION, AND PERIODICALLY THEREAFTER, ACCORDING TO THE ENCLOSED TEST INSTRUCTIONS.

CAUTION: LINE IN USE

IN ORDER FOR "ALARM DIALING EQUIPMENT" TO BE ABLE TO SEIZE THE PHONE LINE TO REPORT AN ALARM OR OTHER EVENT WHEN OTHER CUSTOMER EQUIPMENT (TELEPHONE, ANSWERING SYSTEM, COMPUTER MODEM, ETC.) CONNECTED TO THE SAME LINE IS IN USE, "ALARM DIALING EQUIPMENT" MUST BE CONNECTED TO A PROPERLY INSTALLED RJ31X JACK. THE RJ31X JACK MUST BE CONNECTED IN SERIES WITH, AND AHEAD OF, ALL OTHER EQUIPMENT ATTACHED TO THE SAME PHONE LINE. SERIES INSTALLATION OF AN RJ31X JACK IS DEPICTED IN THE FIGURE BELOW. IF YOU HAVE ANY QUESTIONS CONCERNING THESE INSTRUCTIONS, CONSULT YOUR TELEPHONE COMPANY OR A QUALIFIED INSTALLER ABOUT INSTALLING THE NECESSARY JACK AND ALARM DIALING EQUIPMENT.

2.2 Underwriters Laboratories (UL)

2.2.1 Requirements for All Installations

General requirements are described in this section. When installing an individual device, refer to the specific section of the manual for additional requirements. The following subsections list specific requirements for each type of installation (for example, Central Station Fire Alarm systems, Local Protected Fire Alarm systems, and so on). See Section 10.7 for information on releasing operation.

1. All field wiring must be installed in accordance with NFPA 70 National Electric Code.
2. Use the addressable smoke detectors specified in Section 7 of this manual.
3. Use UL listed notification appliances compatible with the IFP-75 from those specified in the *Appendix* at the back of this manual.
4. A full system checkout must be performed any time the panel is programmed.

Restricted Options:

- The loss of AC signal is defaulted to 3 hours however the system allows settings from 0 - 30 hours. For UL certified installations this number must be set from 1 to 3 hours.
- The system allows the use of non-latching spot type smoke detectors. This feature may not be used in commercial applications whereby a general alarm is sounded. It is intended for elevator recall, door holding applications, and hotel/motel room applications.
- The system allows the Alarm Verification time to be set from 60 to 250 seconds. For UL certified installations the setting must be a maximum of 60 seconds.
- The systems allows the Auto-resound time to be set to 4 or 24 hours. For UL certified installations that are utilizing SWIFT devices, the value must be set to 4 hours.
- Call forwarding shall not be used.
- When two count is used detector spacing shall be cut in half, you shall not use the alarm verification feature, and no delay shall be used.
- P.A.S (positive alarm sequence) feature shall be used only with automatic detectors.

2.2.2 Requirements for Central Station Fire Alarm Systems

1. Use both phone lines. Enable phone line monitors for both lines.
2. You must program a phone number and a test time so that the IFP-75 shall automatically initiate and complete a test signal transmission sequence to its associated receiver at least once every 6 hrs. The AC Loss Hours option must be set from 1-3 hours.
3. If using wired Ethernet or cellular, you must program the corresponding account/subscriber ID and a test time so that the FACP shall automatically initiate a test signal transmission sequence to its associated receiver at least once every 6 hrs.

2.2.3 Requirements for Local Protected Fire Alarm Systems

At least one UL listed supervised notification appliance must be used.

2.2.4 Requirements for Remote Station Protected Fire Alarm Systems

1. Do not exceed the current load restrictions shown in Section 3.7.
2. The AC Loss Hours option must be set from 1-3 hours.

2.2.5 Requirements for the Installation of Carbon Monoxide (CO) Detection and Warning Equipment, NFPA 720

When using carbon monoxide detection the system must be monitored by a Supervising Station.

2.2.6 NFPA Requirements

The following is the minimum configuration to meet the NFPA requirements.

Model/Module	Description	Local	Releasing	Remote Station	Auxiliary	Central Station	Emergency Signaling
067000	Main board	Y	Y	Y	Y	Y	Y
5496	NAC expander	O	Y	O	O	O	O
5220	Direct connect module	N	N	N	Y	N	O
SK-NIC	Network card	O	O	O	O	O	O
SK-FML/ -FSL	Fiber module	O	O	O	O	O	O
IFP-75CB or IFP-75BCB	Enclosure	Y	Y	Y	Y	Y	Y
Cell-Mod/Cell-Cab-SK	Cellular transmitter	O	O	O	O	O	O
Y = YES, N = NO, O = OPTIONAL							

Table 2.3 NFPA Requirements for **IFP-75**

Section 3: Before You Begin Installing

This section of the manual is intended to help you plan your tasks to facilitate a smooth installation. Please read this section thoroughly, especially if you are installing a IFP-75 panel for the first time.

3.1 Inventory

When the IFP-75 shipment is received, check that all the parts have been included in the shipment. The shipment consist of one of each of the following:

- main circuit board with display
- backbox with door
- plastic bag containing two keys, screws, cables, and ten 4.7K ohm end-of-line resistors
- manual

3.2 Environmental Specifications

It is important to protect the IFP-75 control panel from water. To prevent water damage, the following precautions should be FOLLOWED when installing the units:

- Intended for indoor use in dry locations only
- Do not mount directly on exterior walls, especially masonry walls (condensation)
- Do not mount directly on exterior walls below grade (condensation)
- Protect from plumbing leaks
- Protect from splash caused by sprinkler system inspection ports
- Do not mount in areas with humidity-generating equipment (such as dryers, production machinery)

When selecting a location to mount the IFP-75 control panel, the unit should be mounted where it will NOT be exposed to temperatures outside the range of 0°C-49°C (32°F-120°F) or humidity outside the range of 10%-93% at 30°C (86°F) noncondensing.

3.3 Software Downloads

In order to supply the latest features and functionality in fire alarm and life safety technology to our customers, we make frequent upgrades to the embedded software in our products. To ensure that you are installing and programming the latest features, we strongly recommend that you download the most current version of software for each product prior to commissioning any system. Contact Technical Support with any questions about software and the appropriate version for a specific application. HFSS Honeywell Fire Software Suite is available at www.Farenhyt.com.

3.4 Electrical Specifications

Table 3.4 list the terminal block on the IFP-75 as well as a description of the each individual terminal and their respective electrical rating. For location of the terminals refer to Figure 3.2. See also Section 4 for installation.

Terminal No.	Label		Description	Rating	
	Group	Individual		Voltage	Current
Terminal Block 3	TELCO 1	RING	Phone Line 1 Telco Ring		
		TIP	Phone Line 1 Telco Tip		
	PHONE 1	RING	Phone Line 1 Phone Ring		
		TIP	Phone Line 1 Phone Tip		
	TELCO 2	RING	Phone Line 2 Telco Ring		
		TIP	Phone Line 2 Telco Tip		
	PHONE 2	RING	Phone Line 2 Phone Ring		
		TIP	Phone Line 2 Phone Tip		

Table 3.4 : Terminal Descriptions and Electrical Specifications

Terminal No.	Label		Description	Rating	
	Group	Individual		Voltage	Current
Terminal Block 2	RELAY 1	NO	Normally open relay contact	27.4 VDC	2.5 A, resistive
		COM	Common terminal		
		NC	Normally closed relay contact		
	RELAY 2	NO	Normally open relay contact	27.4 VDC	2.5 A, resistive
		COM	Common terminal		
		NC	Normally closed relay contact		
	TROUBLE	NO	Normally open relay contact	27.4 VDC	2.5 A, resistive
		COM	Common terminal		
		NC	Normally closed relay contact		
	SLC IN	–	Used for Class A installations	32 VDC	100 mA
		+			
Terminal Block 2	SLC OUT	–	SLC terminals	32 VDC	100 mA
		+			
	SLC PROG	–	Used for programming SLC Detectors	32 VDC	100 mA
		+			
	SBUS	–	SBUS Power	27.4 VDC	0.5 A
		+			
		A	SBUS Communication	5 VDC	100 mA
		B			
	NAC1*	–	Notification Appliance Circuit/Auxiliary power	27.4 VDC	1 Amp NAC or Aux power
		+			
	NAC2*	–	Notification Appliance Circuit/Auxiliary power	27.4 VDC	1 Amp NAC or Aux power
		+			
P8	EXT. Comm Cellular Connection	B	Cellular Transmitter	input	
		A			
		S+			55 mA, 95 mA
		S-			
P7	Data Network		Used for SK-NIC	24 VDC	21 mA

Table 3.4 : Terminal Descriptions and Electrical Specifications

* *Regulated NAC application. When programmed for releasing, NAC are Special Application.*

3.5 Wiring Specifications

Induced noise (transfer of electrical energy from one wire to another) can interfere with telephone communication or cause false alarms. To avoid induced noise, follow these guidelines:

- Isolate input wiring from high current output and power wiring. Do not pull one multi-conductor cable for the entire panel. Instead, separate the wiring as follows:

High voltage	AC power Terminals
SLC loops	
Audio input/output	Phone line circuits
Notification circuits	NAC1 through NAC2
SBUS	
Relay circuits	

- Do not pull wires from different groups through the same conduit. If you must run them together, do so for as short a distance as possible or use shielded cable. Connect the shield to earth ground at the panel. You must route high and low voltages separately.
- Route the wiring around the inside perimeter of the cabinet. It should not cross the circuit board where it could induce noise into the sensitive microelectronics or pick up unwanted RF noise from the high speed circuits. See Figure 3.1 for an example.

- High frequency noise, such as that produced by the inductive reactance of a speaker or bell, can also be reduced by running the wire through ferrite shield beads or by wrapping it around a ferrite toroid.

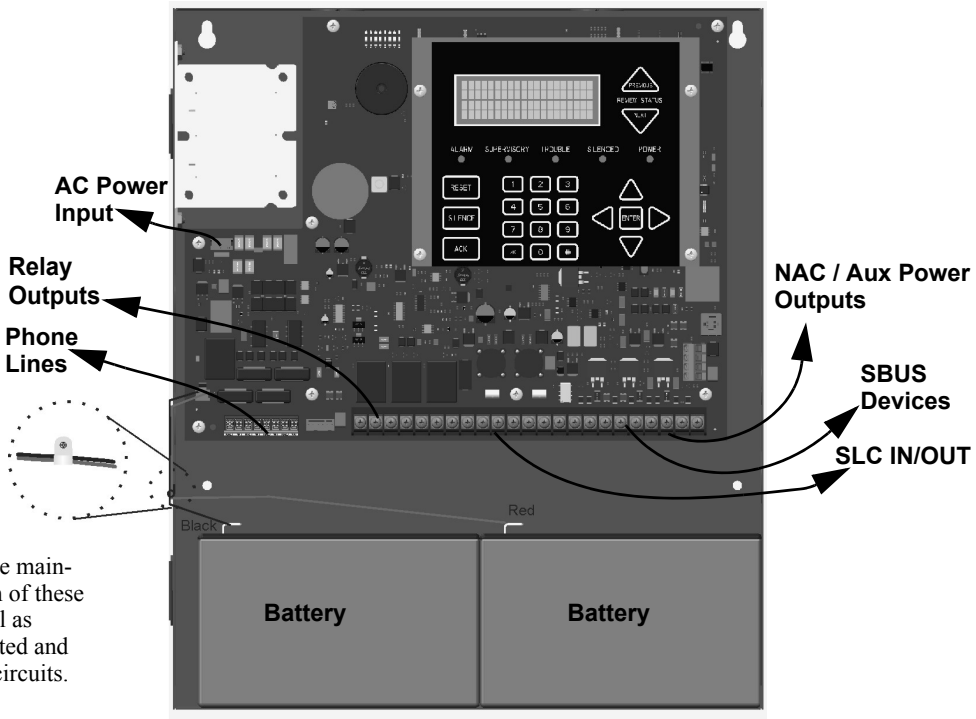

Figure 3.1 Wire Routing Example

3.6 Board Assembly Diagram

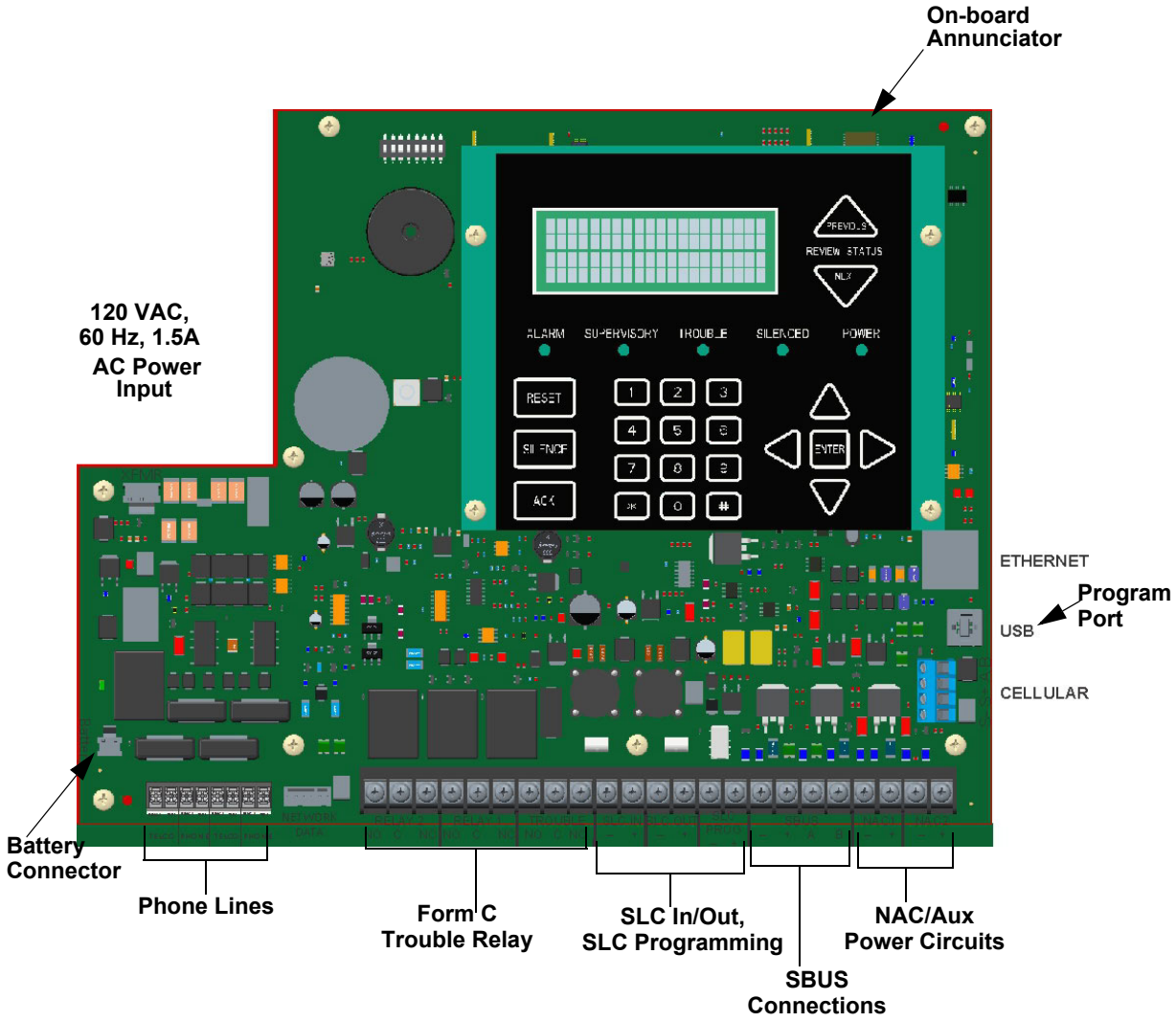

Figure 3.2 Model IFP-75 Assembly

Figure 3.2 shows the circuit boards, and annunciator. If you should need to remove the control board for repair, remove the three mounting screws which hold the control board in the cabinet. Then lift the control board out of the cabinet.

3.7 Calculating Current Draw and Standby Battery

This section is for helping you determine the current draw and standby battery needs if you are using IDP addressable devices (Table 3.5).

3.7.1 Current Draw Worksheet Requirements

The following steps must be taken when determining IFP-75 current draw and standby battery requirements.

1. For the IFP-75, the worst case current draw is listed for the panel, addressable devices, and all SBUS expanders. Fill in the number of addressable devices that will be used in the system and compute the current draw requirements for alarm and standby. Record this information in the Current Calculation Worksheet at Line A.
2. Add up the current draw for all auxiliary devices and record in the table at Line B.
3. Add up all notification appliance loads and record in the table at Line C.
4. For notification appliance circuits and auxiliary devices not mentioned in the manual, refer to the device manual for the current ratings.
5. Make sure that the total alarm current you calculated, including current for the panel itself, does not exceed 2.5A. This is the maximum alarm current for the IFP-75 control panel.

   If the current is above 2.5A you will need to use a notification power expander(s) such as the 5496 NAC Expander, to distribute the power loads so that the IFP-75 or the power expanders do not exceed their power rating. Refer to the current draw worksheets provided with the 5496 manual so you do not exceed their power requirements.
6. Complete the remaining instructions in the Current Calculation Worksheet for determining battery size requirements.

3.7.2 Current Draw Worksheet for IDP SLC Devices

Use Table 3.5 to determine current requirements during alarm/battery standby operation when IDP SLC devices are installed. You can install up to 75 IDP detectors *and* 75 IDP modules[1].

Device	# of Devices	Current per Device			Standby Current	Alarm Current
For each device use this formula:	This column	X This column = Current per number of devices.				
Fire Panel (Current draw from battery)	1	Standby:		165 mA	165 mA	
		Alarm:		310 mA		310 mA
Addressable SLC Detectors						
IDP-PHOTO		Standby/Alarm:		.30mA[6]	mA	mA
IDP-PHOTO-T					mA	mA
IDP-HEAT					mA	mA
IDP-HEAT-HT					mA	mA
IDP-DUCT (includes PHOTOR)[1]					mA	mA
IDP-ACCLIMATE					mA	mA
IDP-HEAT-ROR					mA	mA
IDP-PHOTO-W		SLC	Standby:	200µA	mA	
			Alarm:	4.5mA		mA
IDP-PHOTO-R-W		SLC	Standby:	200µA	mA	
			Alarm:	4.5mA		mA
IDP-PHOTO-T-W		SLC	Standby:	200µA	mA	
			Alarm:	4.5mA		mA
IDP-HEAT-W		SLC	Standby:	200µA	mA	
			Alarm:	4.5mA		mA
IDP-HEAT-ROR-W		SLC	Standby:	200µA	mA	
			Alarm:	4.5mA		mA
IDP-HEAT-HT-W		SLC	Standby:	200µA	mA	
			Alarm:	4.5mA		mA
IDP-BEAM (without integral test)		SLC	Standby/Alarm	.30mA[6]	mA	mA
		SLC	Standby/Alarm:	2 mA	mA	mA
		Aux. Pwr	Standby:	2mA	mA	
			Alarm:	8.5mA		mA
IDP-BEAM-T (with integral test)[3]		SLC	Standby/Alarm:	2mA		
		Aux. Pwr	Standby:	2mA	mA	
			Alarm:	8.5mA		mA
IDP-FIRE-CO		SLC	Standby:	.30mA	mA	
			Alarm:	7.2mA		mA
DNR[5] (non-Relay)		None, included with IDP-PhotoR [6]				
DNR[6] (with Relay)		None, included with IDP-PhotoR & IDP-Relay[7]				
Addressable SLC Modules						
IDP-MONITOR		Standby/Alarm		.375 mA	mA	mA
IDP-MINIMON					mA	mA
IDP-PULL-SA / SK-PULL-DA						
IDP-MONITOR-2		Standby/Alarm:		.75mA	mA	mA
IDP-MON-10		Standby/Alarm:		3.5mA	mA	mA
IDP-CONTROL		SLC	Standby:	.375mA	mA	
			Alarm:	.375mA		mA
		Aux Pwr	Standby:	1.7mA	mA	
			Alarm:	7mA		mA

Table 3.5 Current Calculation Worksheet for IDP Devices

Device	# of Devices	Current per Device			Standby Current	Alarm Current
IDP-CONTROL-6		SLC	Standby:	2.25mA	mA	
			Alarm:	2.25mA		mA
		Aux Pwr	Standby:	8mA	mA	
			Alarm:	20mA		mA
IDP-RELAY		Standby/Alarm:		.255mA	mA	mA
IDP-RELAY-6		Standby/Alarm:		1.45mA	mA	mA
IDP-RELAYMON-2		Standby:		1.3mA	mA	
		Alarm:		24mA		mA
IDP-ZONE		Aux Pwr	Standby:	12mA	mA	mA
			Alarm:	90mA	mA	mA
		SLC	Standby/Alarm:	.27mA	mA	mA
IDP-ZONE-6		Aux Pwr	Standby:	50mA	mA	mA
			Alarm:	270mA	mA	mA
		SLC	Standby/Alarm:	2mA	mA	mA
SLC Accessories						
B200SR-WH / IV Intelligent sounder base		Aux Pwr	Standby:	.5mA	mA	
			Alarm:	35mA		mA
		SLC	Standby	.3mA	mA	
B200S-WH / IV Intelligent sounder base		Aux Pwr	Standby:	.5mA	mA	
			Alarm: (high vol)	35mA		mA
		SLC	Standby	.3mA	mA	
B200SR-LF-WH / IV Low Frequency sounder base		Aux Pwr	Standby:	1mA	mA	
			Alarm:	125mA		mA
B200S-LF-WH / IV Low Frequency sounder base		Aux Pwr	Standby	.55mA	mA	
			Alarm (high vol)	140mA		mA
		SLC	Standby	.30mA	mA	
B224RB-WH / IV Relay Base		Standby/Alarm:		.5mA	mA	mA
RTS151/151 KEY		Alarm:		7.5mA		mA
RA100Z		Alarm:		10mA		mA
SLC Isolator Devices						
IDP-ISO (Isolator Module)	(100 max.)	Standby/Alarm:		.45mA	mA	mA
B224BI / IV Isolator Base	(50 max.)	Standby/Alarm:		.5mA		
Color Guide: -IV = Ivory color, -BL = Black, -WH = White, -WHITE-White						
Accessories Modules						
RA-2000 Remote LCD Annunciator	(8 max.)	Standby:		25 mA	mA	
		Alarm:		50 mA		mA
RA-100 Remote LCD Annunciator		Standby:		20 mA	mA	
		Alarm:		25 mA	mA	
RA-1000 Remote LCD Annunciator		Standby:		20 mA	mA	
		Alarm:		25 mA		mA
5824 Serial / Parallel Module	(4 max.)	Standby/Alarm:		45mA	mA	mA
5496 NAC Expander	(8 max.)	Standby/Alarm:		10 mA	mA	mA
RPS-1000 Power Supply		Standby/Alarm:		10 mA	mA	mA
5865-4 LED Annunciator (with reset and silence switches)	(8 max.)	Standby:		35 mA	mA	
		Alarm:		145 mA		mA
5865-3 LED Annunciator		Standby:		35 mA	mA	
		Alarm:		145 mA		mA
5880 LED I/O Module		Standby:		35 mA	mA	
		Alarm:		200 mA		mA

Table 3.5 Current Calculation Worksheet for IDP Devices

Device	# of Devices	Current per Device		Standby Current	Alarm Current
5883 Relay Interface	(32 max.)	Standby:	0 mA	mA	
		Alarm: (22 mA per relay)	220 mA		mA
SK-NIC Network Interface Card	(1 Max.)	Standby/Alarm:	21 mA	mA	mA
SK-FML Fiber Optic Multi Mode	(1 Max.)	Standby/Alarm:	53 mA	mA	mA
SK-FSL Fiber Optic Single Mode	(1 Max.)	Standby/Alarm:	79 mA	mA	mA
Wireless Modules					
WIDP-WGI Wireless Gateway		Max current using external supply	40 mA	mA	mA
		Max current SLC Power	24 mA	mA	mA
Total System Current					
Auxiliary Devices[2]	Refer to devices manual for current rating.				
IPDACT-2 IP Communicator		Alarm:	136 mA		mA
		Standby:	93 mA	mA	
IPDACT-2UD IP Communicator		Alarm:	155 mA		mA
		Standby:	98 mA	mA	
CELL-MOD / CELL-CAB-SK		Standby:	55 mA	mA	
		Alarm:	100 mA		mA
		Alarm/Standby:	mA	mA	mA
		Alarm/Standby:	mA	mA	mA
		Alarm/Standby:	mA	mA	mA
		Alarm/Standby:	mA	mA	mA
Auxiliary Devices Current					
Notification Appliance Circuits	Refer to device manual for current rating.				
5495/5499 Power Supply		24 VDC	One input circuit: 15 mA		mA
			Both input circuits: 30 mA		mA
		Alarm:	mA		mA
		Alarm:	mA		mA
		Alarm:	mA		mA
Notification Appliances Current					mA
Total current ratings of all devices in system (line A + line B + C)				mA	mA
Total current ratings converted to amperes (line D x.001):				A	A
Number of standby hours (24 or 60 for NFPA 72, chapter 1, 1-5.2.5):				H	
Multiply lines E and F.		Total standby AH		AH	
Alarm sounding period in hours. (For example, 5 minutes =.0833 hours)					H
Multiply lines E and H.		Total alarm AH			AH
Add lines G and I. [3]				AH	
Multiply by the Derating Factor				x 1.25	
		Total ampere hours required		AH	

Table 3.5 Current Calculation Worksheet for IDP Devices

1. Total does not include isolator devices or accessory bases.
2. If using door holders, you do not need to consider door holder current for alarm/battery standby, because power is removed during that time. However, during normal operation, door holders draw current and must be included in the 2.5A total alarm current (1.0A for all other conditions) that can be drawn from the panel.
3. Use next size battery with capacity greater than required.
4. IDP-Beam-T draws a maximum of 500mA from Auxiliary power only when the test feature is used. This should be considered when determining auxiliary power capacity but not calculated into current requirements for day to day operation.
5. The IDP-PhotoR is sold separately from the DNR. Current draw for the DNR + IDP-PhotoR is calculated by increasing the "Number of Devices" column for each IDP-PhotoR used with a DNR.
6. The DNR housing does not include a Relay circuit board. If a relay is needed, be sure to add one to the IDP-Relay & IDP-PhotoR "Number of Devices" column for each DNR used for correct current calculations..
7. The FACP can only support 5 devices w/LED's on. This current draw has been added to the panels alarm current.

3.7.3 Current Draw Worksheet for SK SLC Devices

Use Table 3.6 to determine current requirements during alarm/battery standby operation when SK SLC devices are installed. (Copy the page if additional space is required.) You can install up to 75 SK detectors *and* 75 SK modules.

Device	# of Devices	Current per Device			Standby Current	Alarm Current
For each device use this formula:	This column X	This column =		Current per number of devices.		
Fire Panel (Current draw from battery)	1	Standby:		165 mA	165 mA	
		Alarm:		310 mA		310 mA
Addressable SLC Detectors						
SK-PHOTO		Standby/Alarm:		.30 mA[6]	mA	mA
SK-PHOTO-T					mA	mA
SK-HEAT					mA	mA
SK-HEAT-HT					mA	mA
SK-HEAT-ROR					mA	mA
SK-PHOTO-W		SLC	Standby:	200µA	mA	
			Alarm:	4.5mA		mA
SK-PHOTO-R-W		SLC	Standby:	200µA	mA	
			Alarm:	4.5mA		mA
SK-HEAT-W		SLC	Standby:	200µA	mA	
			Alarm:	4.5mA		mA
SK-HEAT-ROR-W		SLC	Standby:	200µA	mA	
			Alarm:	4.5mA		mA
SK-HEAT-HT-W		SLC	Standby:	200µA	mA	
			Alarm:	4.5mA		mA
SK-ACCLIMATE		Standby/Alarm:		.30 mA[6]	mA	mA
SK-DUCT[5]					mA	mA
SK-BEAM (without integral test)		SLC	Standby/Alarm:	2 mA	mA	mA
		Aux. Pwr	Standby:	2 mA	mA	
			Alarm:	8.5 mA		mA
SK-BEAM-T[4] (with integral test)		SLC	Standby/Alarm:	2 mA	mA	mA
		Aux. Pwr	Standby:	2 mA	mA	
			Alarm:	8.5 mA		mA
SK-FIRE-CO		SLC	Standby:	.30 mA	mA	
			Alarm:	7.2 mA		mA
DNR[5] (non-Relay)		None, included with IDP-PhotoR [6]				
DNR[6] (with Relay)		None, included with IDP-PhotoR & IDP-Relay[7]				

Table 3.6 Current Calculation Worksheet for SK Devices

Device	# of Devices	Current per Device			Standby Current	Alarm Current
Addressable SLC Modules						
SK-MONITOR		Standby/Alarm		.375 mA	mA	mA
SK-MINIMON					mA	mA
SK-Pull-SA/SK-Pull-DA						
SK-MONITOR-2		Standby/Alarm:		.75 mA	mA	mA
SK-MONITOR-10		Standby/Alarm:		3.5 mA	mA	mA
SK-CONTROL		SLC	Standby:	.375 mA	mA	
			Alarm:	.375 mA		mA
		Aux Pwr	Standby:	1.7 mA	mA	
			Alarm:	7 mA		mA
SK-CONTROL-6		SLC	Standby:	2.25 mA	mA	
			Alarm:	2.25 mA		mA
		Aux Pwr	Standby:	8 mA	mA	
			Alarm:	20 mA		mA
SK-RELAY		Standby/Alarm:		.255 mA	mA	mA
SK-RELAY-6		Standby/Alarm:		1.45 mA	mA	mA
SK-RELAYMON-2		Standby:		1.3 mA	mA	
		Alarm:		24 mA		mA
SK-ZONE		Aux Pwr	Standby:	12 mA	mA	mA
			Alarm:	90 mA	mA	mA
		SLC	Standby/Alarm:	.27 mA	mA	mA
SK-ZONE-6		Aux Pwr	Standby:	50 mA	mA	mA
			Alarm:	270 mA	mA	mA
		SLC	Standby/Alarm:	2 mA	mA	mA
SLC Accessories						
B200SR-WH / IV Sounder Base		Aux Pwr	Standby:	.5 mA	mA	
			Alarm:	35 mA		mA
		SLC	Standby	.3 mA	mA	
B200S-WH / IV Intelligent Sounder Base		Aux Pwr	Standby:	.5 mA	mA	
			Alarm: (high vol)	35 mA		mA
		SLC	Standby	.3 mA	mA	
B200SR-LF-WH / IV Low Frequency Sounder Base		Aux Pwr	Standby:	1 mA	mA	
			Alarm:	125 mA		mA
B200S-LF-WH / IV Low Frequency Sounder Base		Aux Pwr	Standby	.55 mA	mA	
			Alarm (high vol)	140 mA		mA
		SLC	Standby	.30 mA	mA	
B224RB-WH / IV Relay Base		Standby/Alarm:		.5 mA	mA	mA
RTS151/151 KEY		Alarm:		7.5 mA		mA
RA100Z		Alarm:		10 mA		mA
SLC Isolator Devices						
SK-ISO (Isolator Module)	(100 max.)	Standby/Alarm:		.45 mA	mA	mA
B224BI-WH -IV Isolator Base	(50 max.)	Standby/Alarm:		.5 mA		
Color Guide: -IV = Ivory color, -BL = Black, -WH = White, -WHITE-White						

Table 3.6 Current Calculation Worksheet for SK Devices

	Device	# of Devices	Current per Device		Standby Current	Alarm Current
	Accessories Modules					
	RA-2000 Remote LCD Annunciator	(8 max.)	Standby:	25 mA	mA	
			Alarm:	50 mA		mA
	RA-100 Remote LCD Annunciator		Standby:	20 mA	mA	
			Alarm:	25 mA	mA	
	RA-1000 Remote LCD Annunciator		Standby:	20 mA	mA	
			Alarm:	25 mA		mA
	5824 Serial / Parallel Module	(4 max.)	Standby/Alarm:	45 mA	mA	mA
	5496 NAC Expander	(8 max.)	Standby/Alarm:	10 mA	mA	mA
	RPS-1000 Power Supply		Standby/Alarm:	10 mA	mA	mA
	5865-4 LED Annunciator (with reset and silence switches)	(8 max.)	Standby:	35 mA	mA	
			Alarm:	145 mA		mA
	5865-3 LED Annunciator		Standby:	35 mA	mA	
			Alarm:	145 mA		mA
	5880 LED I/O Module		Standby:	35 mA	mA	
			Alarm:	200 mA		mA
	5883 Relay Interface	(32 max.)	Standby:	0 mA	mA	
			Alarm: (22 mA per relay)	220 mA		mA
	SK-NIC Network Interface Card	(1 Max.)	Standby/Alarm:	21 mA	mA	mA
	Wireless Modules					
	WSK-WGI Wireless Gateway		Max current using ext supply	40 mA	mA	mA
			Max current SLC Power	24 mA	mA	mA
A	Total System Current					
	Auxiliary Devices[2]	Refer to devices manual for current rating.				
	IPDACT-2 IP Communicator		Alarm:	136 mA		mA
			Standby:	93 mA	mA	
	IPDACT-2UD IP Communicator		Alarm:	155 mA		mA
			Standby:	98 mA	mA	
	CELL-MOD/CELL-CAB-SK		Standby:	55 mA	mA	
			Alarm:	95 mA		mA
			Alarm/Standby:	mA	mA	mA
			Alarm/Standby:	mA	mA	mA
			Alarm/Standby:	mA	mA	mA
			Alarm/Standby:	mA	mA	mA
B	Auxiliary Devices Current					
	Notification Appliance Circuits	Refer to device manual for current rating.				
	5495/5499 Power Supply		24 VDC	One input circuit: 15 mA		mA
				Both input circuits: 30 mA		mA
			Alarm:	mA		mA
			Alarm:	mA		mA
			Alarm:	mA		mA
C	Notification Appliances Current					mA
D	Total current ratings of all devices in system (line A + line B + C)				mA	mA
E	Total current ratings converted to amperes (line D x .001):				A	A
F	Number of standby hours (24 or 60 for NFPA 72, chapter 1, 1-5.2.5):				H	
G	Multiply lines E and F. Total standby AH				AH	
H	Alarm sounding period in hours. (For example, 5 minutes = .0833 hours)					H
I	Multiply lines E and H. Total alarm AH					AH

Table 3.6 Current Calculation Worksheet for SK Devices

	Device	# of Devices	Current per Device	Standby Current	Alarm Current
J	Add lines G and I.[4]			AH	
	Multiply by the Derating Factor			x 1.25	
			Total ampere hours required		

Table 3.6 Current Calculation Worksheet for SK Devices

1. Total does not include isolator devices or accessory bases.[1].
2. If using door holders, you do not need to consider door holder current for alarm/battery standby, because power is removed during that time. However, during normal operation, door holders draw current and must be included in the 2.5A total alarm current (1.0A for all other conditions) that can be drawn from the panel.
3. Use next size battery with capacity greater than required.
4. SK-BEAM-T draws a maximum of 500mA from Auxiliary power only when the test feature is used. this should be considered when determining auxiliary power capacity but not calculated into current requirements for day to day operation.
5. The SK-DUCT housing contains a vacant mount for a SK-RELAY (sold separately). Current draw for the SK-RELAY is calculated by increasing the SK-RELAY row of the calculation sheet by one for each SK-RELAY used with a SK-DUCT.
6. The FACP can only support 5 devices w/LED's on. This current draw has been added to the panels alarm current.

3.7.4 Current Draw Worksheet for SD SLC Devices

Use Table 3.7 to determine current requirements during alarm/battery standby operation when SD SLC devices are installed. You can install up to 75 SD devices per panel.[1]

Device	# of Devices	Current per Device			Standby Current	Alarm Current
For each device use this formula:	This column	X This column		= Current per number of devices.		
Fire Panel (Current draw from battery)	1	Standby:		165mA	165 mA	
		Alarm:		310mA		310 mA
Addressable SLC Devices						
SD500-AIM		Standby/Alarm:		.30mA[5]	mA	mA
SD500-MIM					mA	mA
SD500-ARM					mA	mA
SD500-PS/SD500-PSDA					mA	mA
SD505-HEAT					mA	mA
SD505-PHOTO					mA	mA
SD500-ANM		Aux. Pwr	Standby:	8mA	mA	
			Alarm:	60mA		mA
		SLC	Standby/Alarm:	.55mA	mA	mA
SD500-SDM		Aux. Pwr	Standby:	20mA	mA	
			Alarm:	106mA		mA
		SLC	Standby/Alarm:	.55mA	mA	mA
SLC Accessory Bases						
SD505-6RB		Standby/Alarm:		.082mA	mA	mA
SD505-6SB		Aux. Pwr	Standby:	1mA	mA	
			Alarm:	32mA		mA
		SLC	Standby/Alarm	.082mA	mA	mA
SD505-DUCTR		Aux. Pwr	Standby:	20mA[2]	mA	
			Alarm:	62mA[2]		mA
		SLC	Standby/Alarm:	.5mA	mA	mA
SD505-DTS-K		None, included with SD505-DUCTR worst case.				
SD505-DUCT		SLC	Standby/Alarm:	.5mA	mA	mA
SLC Isolator Devices						
SD500-LIM	(100 max.)	Standby/Alarm		.092mA	mA	mA
SD505-6IB	(50 max.)					
Accessories Modules						
RA-2000 Remote LCD Annunciator	(8 max.)	Standby:		25 mA	mA	
		Alarm:		50 mA		mA
RA-100 Remote LCD Annunciator		Standby:		20 mA	mA	
		Alarm:		25 mA	mA	
RA-1000 Remote LCD Annunciator		Standby:		20 mA	mA	
		Alarm:		25 mA		mA
5824 Serial / Parallel Module	(4 max.)	Standby/Alarm:		45mA	mA	mA
5496 NAC Expander	(8 max.)	Standby/Alarm:		10mA	mA	mA
RPS-1000 Power Supply		Standby/Alarm		10mA	mA	mA
5865-4 LED Annunciator (with reset and silence switches)	(8 max.)	Standby:		35mA	mA	
		Alarm:		145mA		mA
5865-3 LED Annunciator		Standby:		35mA	mA	
		Alarm:		145mA		mA
5880 LED I/O Module		Standby:		35mA	mA	
		Alarm:		200mA		mA

Table 3.7 Current Calculation Worksheet for SD Devices

Device	# of Devices	Current per Device		Standby Current	Alarm Current
5883 Relay Interface	(32 max.)	Standby:	0mA	mA	
		Alarm: (22 mA per relay)	220mA		mA
SK-NIC Network Interface Card	(1 Max.)	Standby/Alarm:	21mA	mA	mA
SK-FML Fiber Optic Multi Mode	(1 Max.)	Standby/Alarm:	53mA	mA	mA
SK-FSL Fiber Optic Single Mode	(1 Max.)	Standby/Alarm:	79mA	mA	mA
Total System Current					
Auxiliary Devices[3]	Refer to devices manual for current rating.				
IPDACT-2 IP Communicator		Alarm:	136 mA		mA
		Standby:	93 mA	mA	
IPDACT-2UD IP Communicator		Alarm:	155 mA		mA
		Standby:	98 mA	mA	
CELL-MOD/CELL-CAB-SK		Standby:	55 mA	mA	
		Alarm:	100 mA		mA
		Alarm/Standby:	mA	mA	mA
		Alarm/Standby:	mA	mA	mA
		Alarm/Standby:	mA	mA	mA
		Alarm/Standby:	mA	mA	mA
Auxiliary Devices Current					
Notification Appliance Circuits	Refer to device manual for current rating.				
5495/5499 Power Supply		24 VDC	One input circuit: 15mA		mA
			Both input circuits: 30mA		mA
		Alarm:	mA		mA
		Alarm:	mA		mA
		Alarm:	mA		mA
		Alarm:	mA		mA
Notification Appliances Current					mA
Total current ratings of all devices in system (line A + line B + C)				mA	mA
Total current ratings converted to amperes (line D x .001):				A	A
Number of standby hours (24 or 60 for NFPA 72, chapter 1, 1-5.2.5):				H	
Multiply lines E and F.			Total standby AH	AH	
Alarm sounding period in hours. (For example, 5 minutes = .0833 hours)					H
Multiply lines E and H.			Total alarm AH		AH
Add lines G and I.[4]				AH	
Multiply by the Derating Factor				x 1.25	
			Total ampere hours required		

Table 3.7 Current Calculation Worksheet for SD Devices

1. Total does not include isolator devices or accessory bases.
2. If using 24 VDC aux power only. No standby or alarm current for battery calculation if using 24 VAC, 120 VAC or 240 VAC.
3. If using door holders, you do not need to consider door holder current for alarm/battery standby, because power is removed during that time. However, during normal operation, door holders draw current and must be included in the 1.0A total current that can be drawn from the panel.
4. Use next size battery with capacity greater than required.
5. The FACP can only support 5 devices with LED's on. This current draw has been added to the panels alarm current.

Maximum Battery Standby Load

The table below shows the maximum battery standby load for the IFP-75 based on 24 and 60 hours of standby. The standby load calculations of line D in the Current Draw Calculation Worksheet (Table 3.8) must be less than the number shown in the table below for the battery size used and standby hours required.

Rechargeable Battery Size	Max. Load 24hrs Standby, 5 minutes Alarm	*Max. Load for 60hrs Standby, 5 minutes Alarm
7AH	221mA	85mA
18AH	675mA	250mA
33AH	1.1A	450mA

Table 3.8 Maximum Battery Standby Load

NOTE: *Required for NFPA 72 Auxiliary Protected Fire Alarm systems for Fire Alarm Service (City Box) and Remote Station Protected Fire Alarm systems (Polarity Reversal) and Digital Alarm Communicator/Transmitter (DACT).

WARNING: BATTERIES

FARENHYT DOES NOT SUPPORT THE USE OF BATTERIES SMALLER THAN THOSE LISTED IN TABLE ABOVE. USING A BATTERY TOO SMALL FOR THE CONFIGURATION COULD OVERLOAD THE BATTERY, RESULTING IN THE BATTERY HAVING LESS THAN THE REQUIRED 24 HOURS STANDBY POWER. USE THE CURRENT CALCULATION WORKSHEET TO CALCULATE THE CORRECT BATTERY AMPERES/HOUR RATING NEEDED FOR THE SYSTEM CONFIGURATION.

Section 4: Control Panel Installation

CAUTION:

TO AVOID THE RISK OF ELECTRICAL SHOCK AND DAMAGE TO THE UNIT, POWER SHOULD BE OFF AT THE CONTROL PANEL WHILE INSTALLING OR SERVICING.

4.1 Mounting the Control Panel Cabinet

Read the environmental specifications in Section 3.2 before mounting the IFP-75 panel.

The IFP-75 cabinet base dimensions are: 12.531” W x 14.875” H.

The IFP-75 panel should be located within a secured area, where it is accessible to main drop wiring runs and where it can be easily tested and serviced. End-users responsible for maintaining the panel should be able to hear alarms and troubles. When selecting a location, keep in mind that the panel itself is the main source of alarm and trouble annunciation.

When mounting on interior walls, use appropriate screw anchors in plaster. When mounting on concrete, especially when moisture is expected, attach a piece of ¾” plywood to the concrete surface and then attach the IFP-75 to the plywood. Also mount any other desired components to the plywood.

DO NOT flush-mount the IFP-75 cabinet in a wall designated as a fire break

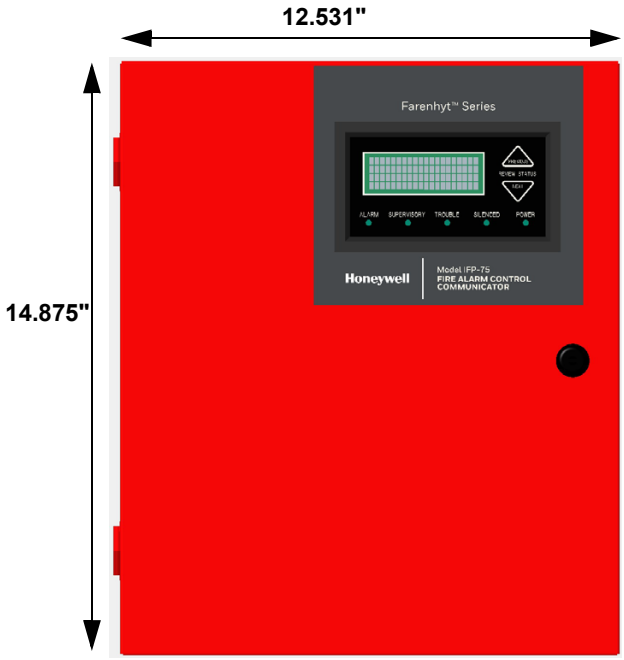

Figure 4.3 IFP-75 Cabinet

4.1.1 Preventing Water Damage

Water damage to the fire system can be caused by moisture entering the cabinet through the conduits. Conduits that are installed to enter the top of the cabinet are most likely to cause water problems. Installers should take reasonable precautions to prevent water from entering the cabinet. Water damage is not covered under warranty.

4.1.2 Removing the IFP-75 Assembly from the Housing

If it should ever be necessary to remove the control panel assembly from the cabinet for repair, do so by removing the screws that hold the control panel in to the cabinet. Do not attempt to disassemble the circuit boards.

4.1.3 Dead Front Installation and removal

This section provides instructions to install and or remove the optional dead front (DF-50) for the control panel cabinet.

Installing the Dead Front

Follow these steps to properly install the dead front panel into the control panel cabinet.

1. Remove the top two annunciator screws, do not discard them they will be reused. See Figure 4.4 for annunciator screw location.
2. Set the dead front into the cabinet as shown in Figure 4.4.

3. Reinsert the two annunciator screws.

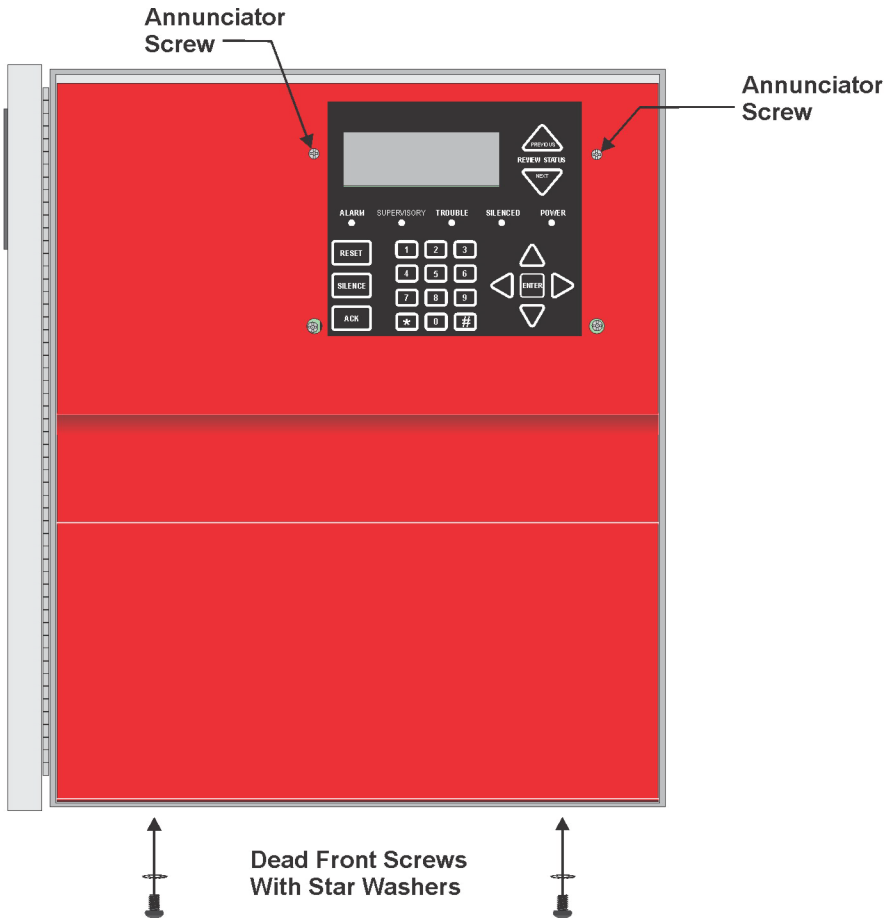

Figure 4.4 Dead Front Installation and Removal

4. Insert the two screws with the star washers into the bottom of the cabinet to secure the dead front into place. See Figure 4.4.

Dead Front Removal

Follow these steps to properly remove the dead front panel from the control panel cabinet.

1. Remove the two annunciator screws, do not discard them. See Figure 4.4.
2. Remove the two screws and star washers from the bottom of the cabinet. See Figure 4.4.
3. Remove the dead front panel from the control panel cabinet.
4. Reinsert the two annunciator screws. See Figure 4.4.

4.2 AC Connection

At installation, connect the AC terminals to the power source as shown in Figure 4.5. It may be necessary for a professional electrician to make this connection.

WARNING: RISK OF ELECTRICAL SHOCK AND EQUIPMENT DAMAGE

Several different sources of power can be connected to this panel. Disconnect all sources of power before servicing. The panel and associated equipment may be damaged by removing and/or inserting cards, modules or interconnecting cables while this unit is energized

The AC is rated at 120 VAC, 60 Hz, 1.5A.

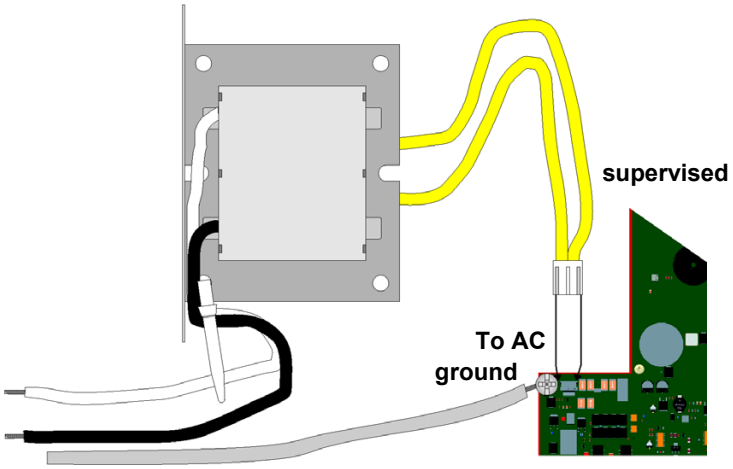

Figure 4.5 120VAC Power Connection

4.3 Battery Power

The batteries must be sealed lead acid type. Before connecting the batteries to the FACP, make certain that the interconnect cable between the batteries is not connected. Do not connect the battery jumper cable until the system is completely installed. Observe polarity when connecting the batteries.

WARNING: RISK OF PERSONAL INJURY

Battery contains sulfuric acid which can cause severe burns to the skin and eyes and can destroy fabrics. If contact is made with sulfuric acid, immediately flush the skin or eyes with water for 15 minutes and seek immediate medical attention.

The control panel battery charge capacity is 7.0 to 35 AH. The main control cabinet can house batteries up to 7 AH, larger capacity batteries can be housed in a Remote Battery Box (P/N RBB). See Section Section 4.3.1 for deteails.Use 12V batteries of the same AH rating. Determine the correct AH rating as per your current load calculation (see Section Section 3.7).

Maximum battery charging current 3.1 Amps.

Wire batteries in series to produce a 24-volt equivalent. Do not parallel batteries to increase the AH rating.

The following steps and diagram explain how to connect the batteries.

1. Connect the black wire from the control panel negative (–) battery terminal to the negative (–) side of Battery #2.
2. Connect the jumper wire provided (P/N 140694) from the positive (+) side of Battery #2 to the (–) negative side of Battery #1.
3. Connect the red wire from the control panel positive (+) terminal to the positive (+) side of Battery #1.

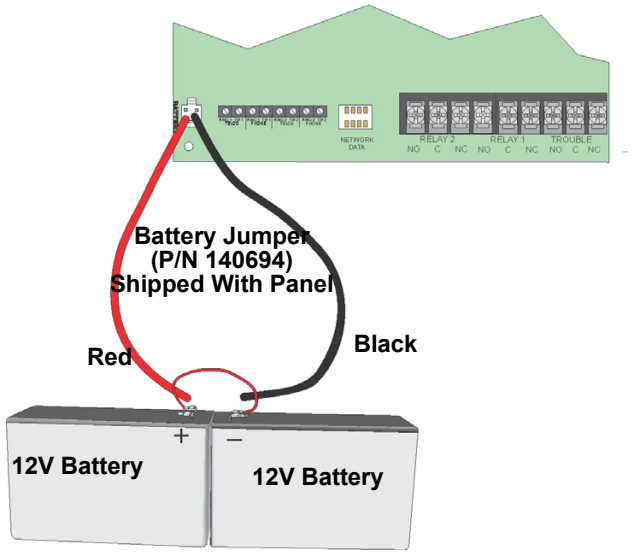

Figure 4.6 Battery Connection

4.3.1 Battery Accessory Cabinet

The Model RBB Accessory cabinet can be used when your backup batteries requirements use backup batteries that are too large to fit into the main control panel cabinet. The RBB cabinet holds batteries up to the 35 AH size. The RBB dimensions are 16" W x 10" H x 6" D (40.64 cm W x 25.4 cm H x 15.24 cm D).

Installing the RBB Accessory Cabinet and Batteries

To properly install the accessory cabinet and backup batteries, follow these steps:

1. Mount the accessory cabinet. See Figure 4.7 for the four cabinet mounting holes.
   - If mounting onto drywall the accessory cabinet must be mounted onto 3/4-inch plywood. This is necessary because the weight of the batteries inside the accessory cabinet could cause the cabinet to pull away from the drywall.
   - When mounting on concrete, especially when moisture is expected, attach a piece of ¾" plywood to the concrete surface and then attach the RBB cabinet to the plywood.
   - If using the battery cable extenders provided (P/N 140643), mount the RBB cabinet no more than 18" away from the main control panel cabinet. This will ensure that the battery cables reach the battery terminals.

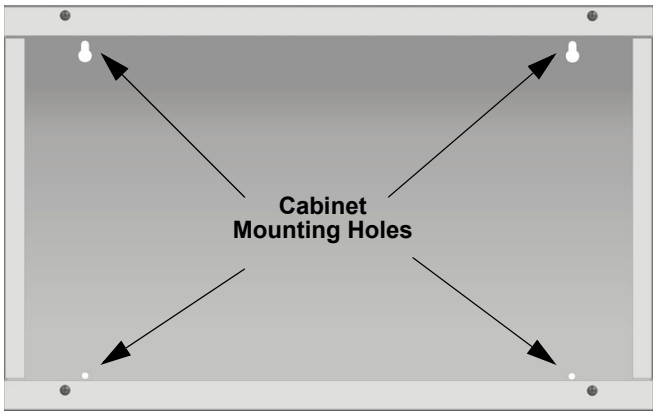

Figure 4.7 RBB Cabinet Mounting Holes

2. Connect the main control panel battery cables to the battery cable extenders as shown in Figure 4.8.

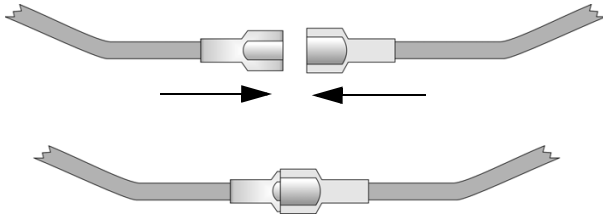

Figure 4.8 Splicing Control panel Battery Cable to RBB Battery Cable Extenders

3. Run extended battery cable from control panel cabinet through conduit to RBB cabinet. See Figure 4.9.

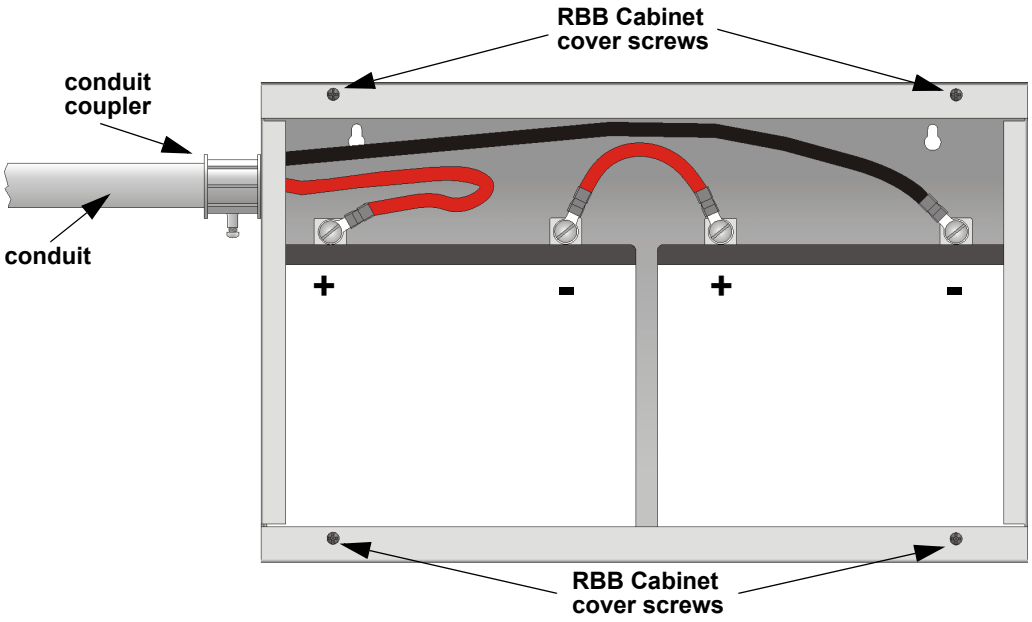

Figure 4.9 Battery Connections in the RBB Cabinet

NOTE: Figure 4.9 is an example of how the wire connections can be routed. However, any other cabinet knock-outs (on either the main control panel or the RBB cabinet), that are not previously being used may be utilized to connect conduit between the two cabinets.

4. Connect battery leads to the backup battery terminals. See Figure 4.9. Observe the proper polarity to prevent damage to the batteries or the control panel.
5. Insert the RBB cover screws into the cover mounting holes (see Figure 4.9). Screw the cover screw 3/4 of the way into the cover mounting hole.
6. Align the cover plate mounting keyhole over the cover mounting screws. See Figure 4.10.

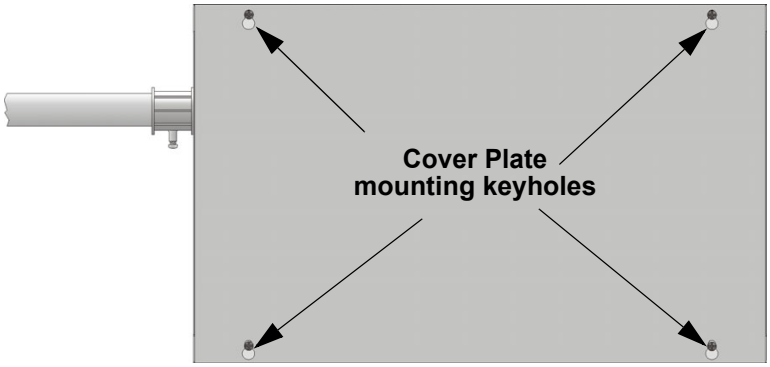

Figure 4.10 Cover Plate Mounting Keyholes and Cover Mounting Screws Alignment

7. Slide the cover into place and tighten the cover mounting screws. See Figure 4.10.

4.4 SBUS Wiring

This section contains information on calculating SBUS wire distances and the types of wiring configurations (Class B).

4.4.1 Calculating Wiring distance for SBUS modules

The following instructions will guide you in determining the type of wire and the maximum wiring distance that can be used with control panel SBUS accessory modules.

To calculate the wire gauge that must be used to connect SBUS modules to the control panel, it is necessary to calculate the total worst case current draw for all modules on a single 4-conductor bus. The total worst case current draw is calculated by adding the individual worst case currents for each module. The individual worst case values are shown in the table below.

NOTE: Total worst case current draw on a single SBUS cannot exceed 1 amp.

Model Number	Worst Case Current Draw
RA-1000, RA-100 or RA-2000 LCD Annunciator	.100 amps
5824 Serial/Parallel Printer Interface Module	.040 amps
5880 LED I/O Module	.250 amps
5865 LED Fire Annunciator	.200 amps
5496 NAC Expander	.010 amps
SK-NIC Network Interface Card	.021 amps
CELL-MOD/CELL-CAB-SK	.145 amps
SK-F485C Fiber Converter	.125 amps

Table 4.9 SBUS Device Current Draw

After calculating the total worst case current draw, Table 4.10 specifies the maximum distance the modules can be located from the panel on a single wire run. The table insures 6.0 volts of line drop maximum. In general, the wire length is limited by resistance, but for heavier wire gauges, capacitance is the limiting factor.

These cases are marked in the chart with an asterisk (*). Maximum length can never be more than 6,000 feet, regardless of gauge used. (The formula used to generate this chart is shown in the note below).:

Wiring Distance: SBUS Modules to Panel				
Total Worst Case Current Draw (amps)	**22 Gauge**	**18 Gauge**	**16 Gauge**	**14 Gauge**
0.100	1852 ft.	4688 ft.	* 6000 ft.	* 6000 ft.
0.200	926 ft.	2344 ft.	3731 ft.	5906 ft.
0.300	617 ft.	1563 ft.	2488 ft.	3937 ft.
0.400	463 ft.	1172 ft.	1866 ft.	2953 ft.
0.500	370 ft.	938 ft.	1493 ft.	2362 ft.
0.600	309 ft.	781 ft.	1244 ft.	1969 ft.
0.700	265 ft.	670 ft.	1066 ft.	1687 ft.
0.800	231 ft.	586 ft.	933 ft.	1476 ft.
0.900	206 ft.	521 ft.	829 ft.	1312 ft.
1.000 (Max)	185 ft.	469 ft.	746 ft.	1181 ft.

Table 4.10 Wire Distances Per Wire Gauge Using Copper Wire

NOTE: The following formulas were used to generate the wire distance chart

$$\text{Maximum Resistance (Ohms)} = \frac{6.0 \text{ Volts}}{\text{Total Worst Case Current Draw (amps)}}$$

$$\text{Maximum Wire Length (Feet) (6000 feet maximum)} = \frac{\text{Maximum Resistance (Ohms)}}{\text{Rpu}} * 500$$

where: Rpu = Ohms per 1000 feet for various wire gauges (see table below)

Wire Gauge	Ohms per 1000 feet (Rpu)
22	16.2
18	6.4
16	4.02
14	2.54

Table 4.11 : Typical Wire Resistance Per 1000 ft. Using Copper Wire

■ Wiring Distance calculation example:

Suppose a system is configured with the following SBUS modules:

2 - Module RA-100 LCD Annunciator

1 - 5496 NAC Expander

1 - 5865 LED Fire Annunciator

1 - 5824 Parallel/Serial Interface

The total worst case current is calculated as follows:

RA-100 Current Draw	= 2 x .100 amps	= .200 amps
5496 Current Draw	= 1 x .010 amps	= .010 amps
5865 Current Draw	= 1 x .200 amps	= .145 amps
5824 Current Draw	= 1 x .040 amps	= .040 amps
Total Worst Case Current Draw		= .395 amps

Using this value, and referring to the Wiring Distance table, it can be found that the available options are:

370 feet maximum using 22 Gauge wire

938 feet maximum using 18 Gauge wire

1493 feet maximum using 16 Gauge wire

2362 feet maximum using 14 Gauge wire

4.4.2 Wiring Configurations

Figure 4.11 illustrates Class B configuration.

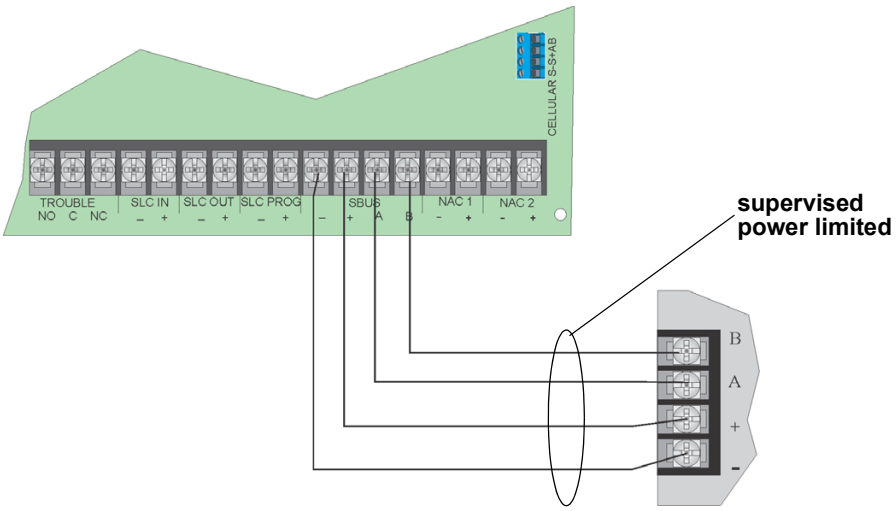

Figure 4.11 SBUS Class B Wiring

How to Power SBUS Devices From Auxiliary Power Supply

Figure 4.12 illustrates how to power SBUS devices from an Auxiliary Power Supply such as the 5495 or 5499, when the maximum number of SBUS devices exceeds the SBUS power requirements.

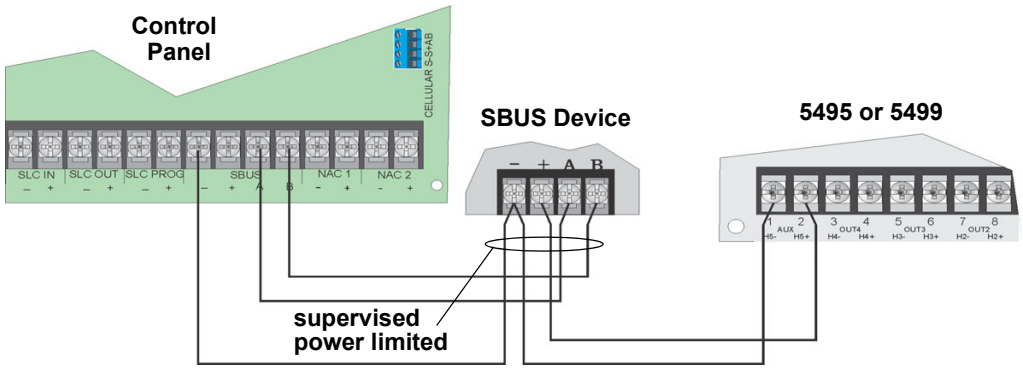

Figure 4.12 Powering SBUS Devices From 5495 or 5499

NOTE: The earth ground jumper on the 5495/5499 must be removed in this configuration

4.5 RA-100 Remote Annunciator Installation

The optional Model RA-100 Remote Annunciator, is shown in Figure 4.13. The RA-100 can be surface or flush mounted. Up to 8 RA-100s can be added to the IFP-75 system in any combination.

Figure 4.13 Model RA-100 Remote Annunciator, Front View

RA-100 installation involves the following steps:

1. Make sure power is off at the panel.
2. Mount the RA-100 in the desired location (see Section 4.5.1).
3. Connect the RA-100 to the panel (see Section 4.4.2).
4. Use the DIP switches on the back of the RA-100 to assign an ID# to the RA-100 (see Section Section 4.11.1).
5. The new RA-100 module must be added to the system through programming. JumpStart® AutoProgramming will add the module automatically (see Section 8.1). You can also add it manually (see Section 9.2.2). Select a name, if desired.

4.5.1 Mounting the RA-100

This section of the manual describes mounting the remote annunciator. The annunciator can be flush- or surface-mounted.

Flush Mounting

This section of the manual describes flush mounting.

■ Follow these steps to flush mount the RA-100

1. The back box dimensions are 9-9/32” w x 8-3/8” h. The minimum depth 2". The back box can be mounted prior to the complete installation of the RA-100using any of the mounting holes shown in Figure 4.14.

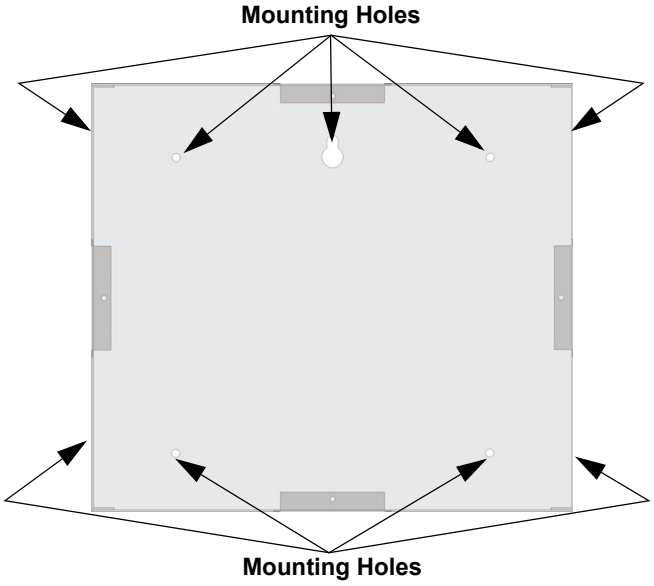

Figure 4.14 Back Box Mounting Holes

2. Remove knockout holes as needed for wires. See Figure 4.15 for backbox knockout locations

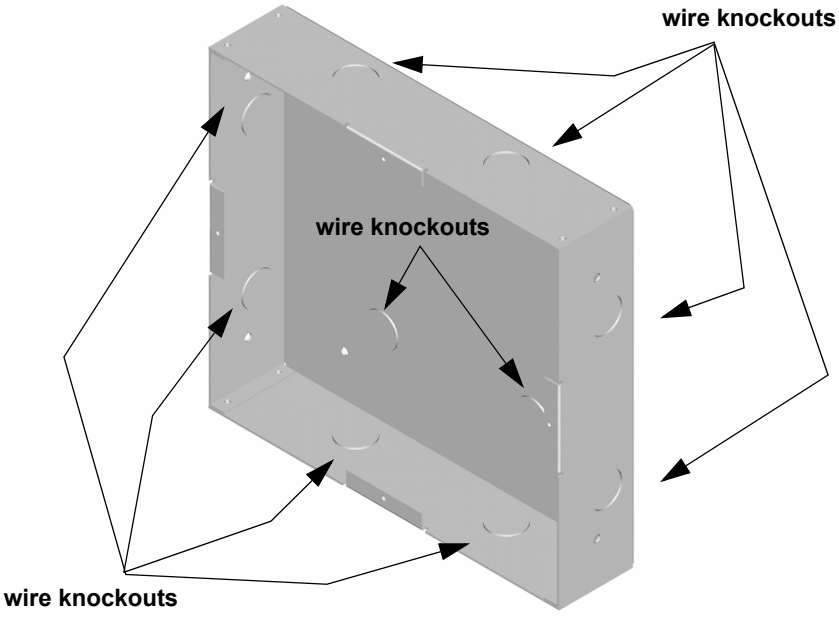

Figure 4.15 Back Box Knockout Locations

3. Wire the Annunciator board to the main control panel. See Figure 4.11.

4. Attach the annunciator and door assembly to back box as shown in Figure 4.16 using the supplied screws.

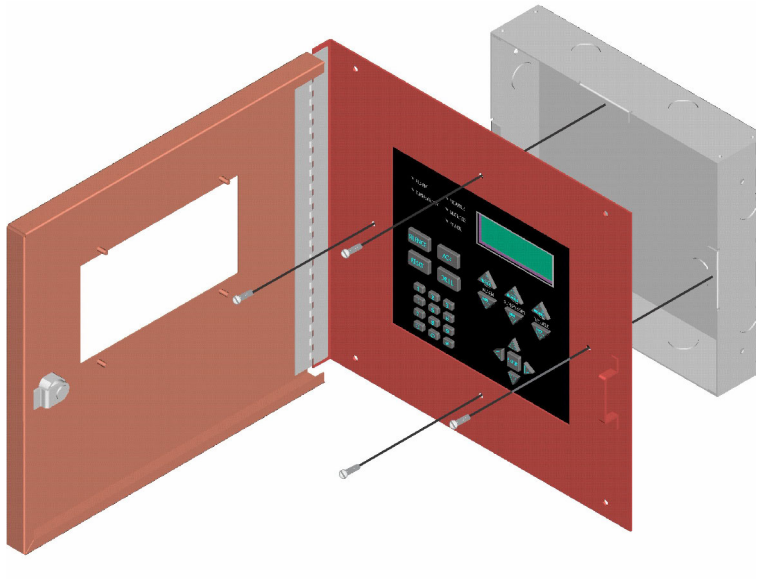

Figure 4.16 Attaching Annunciator/Door Assembly to Backbox

Surface Mounting

The optional Model RA-100TG/TR trim ring kit is available for use when surface mounting.

1. Remove the desired knock out. See Figure 4.15.
2. To properly mount the back box, insert a single screw into the key shaped mounting hole. Do not tighten all the way. See Figure 4.17.

   Place a level on top of the back box, with the back box level insert the rest of the mounting screws.

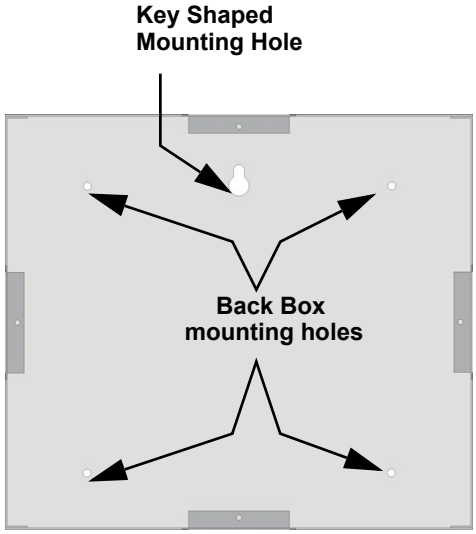

Figure 4.17 Back Box Surface Mount Holes

3. Run wires to the control panel.

4. Place the trim ring over the back box as shown in Figure 4.18.

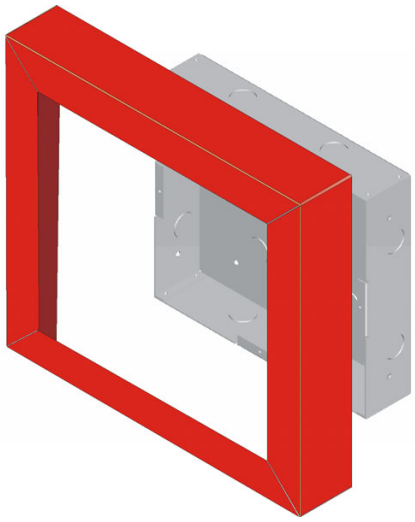

Figure 4.18 Installing Trim Ring

5. Attach the Door assembly to the back box using screws provided.
6. After the annunciator wiring to the panel has been completed (described in Section 4.4.2), replace the electronic assembly in the back box. Place the bezel over the back box and tighten the set screws on the bezel.

4.5.2 RA-100 Connection to the Panel

Connect the RA-100 to the panel as shown in Figure 4.19.

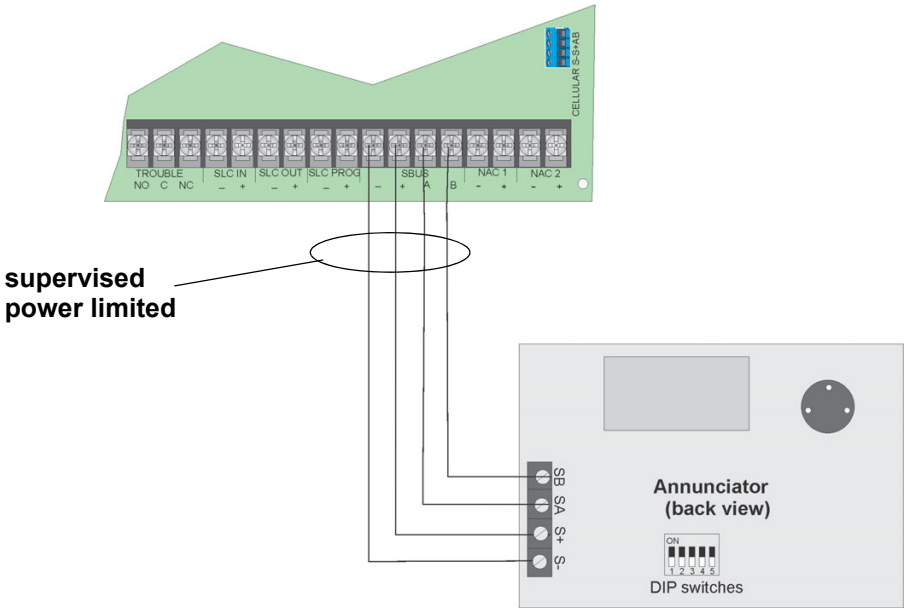

Figure 4.19 Model 6860 Connection to the Panel

4.6 RA-1000 Remote Annunciator Installation

The optional Model RA-1000 Remote Annunciator, is shown in Figure 4.20. Up to 8 annunciators can be added to the IFP-75 system.

Figure 4.20 Model RA-1000 Remote Annunciator, Front View

RA-1000 installation involves the following steps:

1. Make sure power is off at the panel.
2. Mount the RA-1000 in the desired location (see Section 4.6.1).
3. Connect the RA-1000 to the panel (see Section 4).
4. Use the dipswitches on the back of the RA-1000 to assign an ID# to the RA-1000 (see Section 4.11.1).
5. The new RA-1000 module must be added to the system through programming. JumpStart will add the module automatically (see Section 8.1). You can also add it manually (see Section 9.2.2). Select a name, if desired.

4.6.1 Mounting the RA-1000

This section of the manual describes mounting the remote annunciator. The annunciator can be flush- or surface-mounted. Figure 4.21 shows the parts of the annunciator. Instructions for disassembling and mounting appear on the following pages.

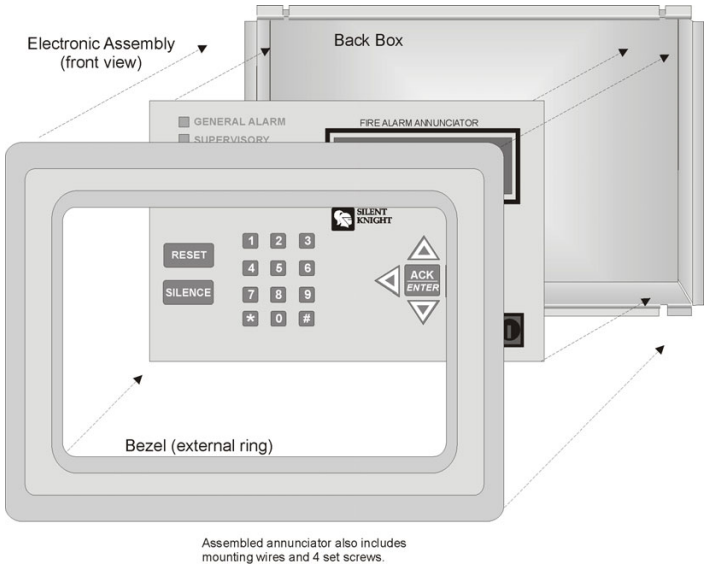

Figure 4.21 Annunciator Parts

The RA-1000 comes from the factory fully assembled. You must disassemble it for mounting. To disassemble the annunciator, use a 5/64 hex wrench to remove the set screws, located on the bottom of the annunciator bezel. (See Figure 4.22 for location of the set screws.)

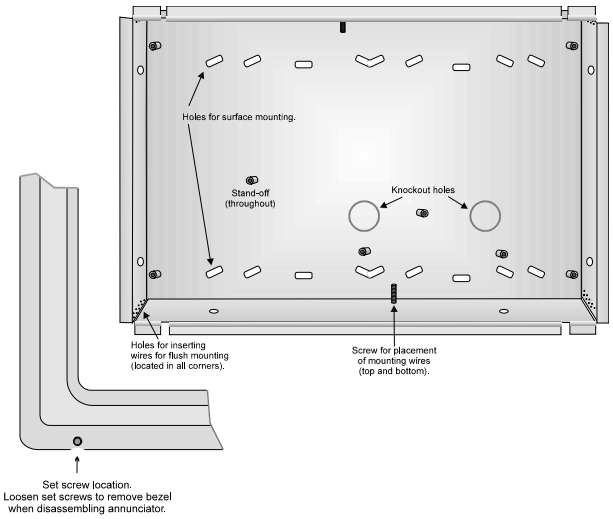

Figure 4.22 Annunciator Back Box and Bezel Details

Flush Mounting

This section of the manual describes flush mounting. You can flush-mount with or without an electrical box.

■ Flush Mounting with an Electrical Box

The RA-1000 annunciator can be used with the following types of electrical boxes: 4S, single-gang, and double-gang.

If an electrical box is used, the box must be 1-3/8” back from the face of the wall to accommodate the annunciator. Studs used with an electrical box must be two by fours (or larger).

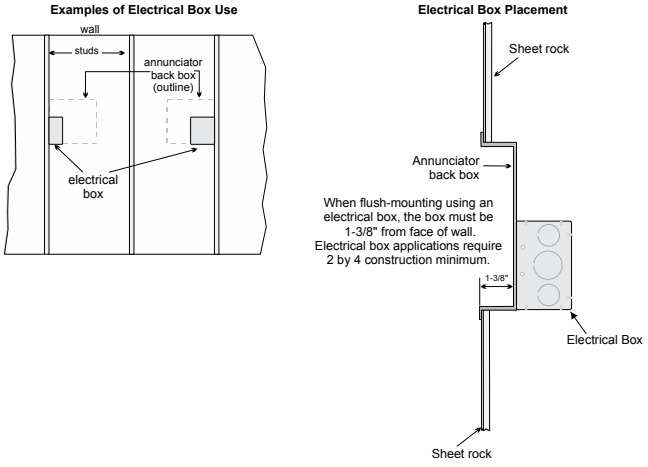

Figure 4.23 Placement of Electrical Box for Flush Mounting

■ Flush Mounting Steps

1. Cut a hole in the sheet rock to the following dimensions: 8-1/4” W x 6-5/8”H. If an electrical box is used, the box must be 1-3/8” back from face of wall to accommodate the annunciator (see Figure 4.23).
2. Remove knockout holes as needed for wires.
3. Fit the annunciator back box into the hole and stabilize with mounting wires. Angle the mounting wires into the first hole past the sheet rock. Secure the wires behind the screws as shown in Figure 4.24. When all four wires are in place, the back box should fit snugly into the hole in the sheet rock.

4. After the annunciator wiring to the panel has been completed (described in Section 4), replace the electronic assembly in the back box. Place the bezel over the back box and tighten the set screws on the bezel.

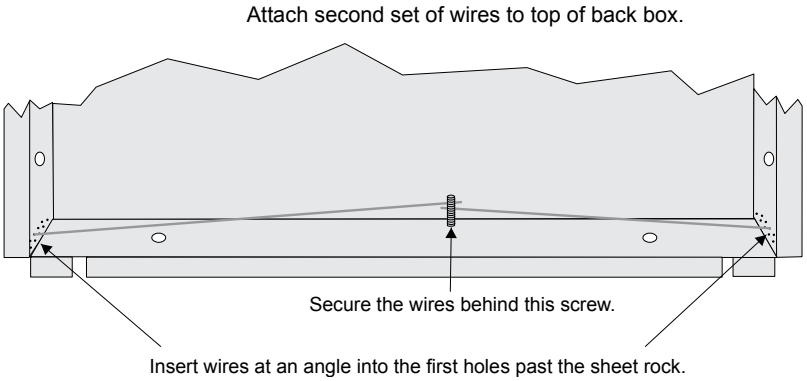

Figure 4.24 Flush Mounting the Back Box

Surface Mounting

The RA-1000 can be mounted directly to a surface or can be attached to a single, double, or four-square electrical box. The Model 5860TG/TR trim ring kit is available for use when surface mounting.

1. Drill holes in the surface to match the screw holes on the back box.
2. Fit the trim ring over the back box.
3. Attach the back box to the surface using screws provided.
4. After the annunciator wiring to the panel has been completed (described in Section 4), replace the electronic assembly in the back box. Place the bezel over the back box and tighten the set screws on the bezel.

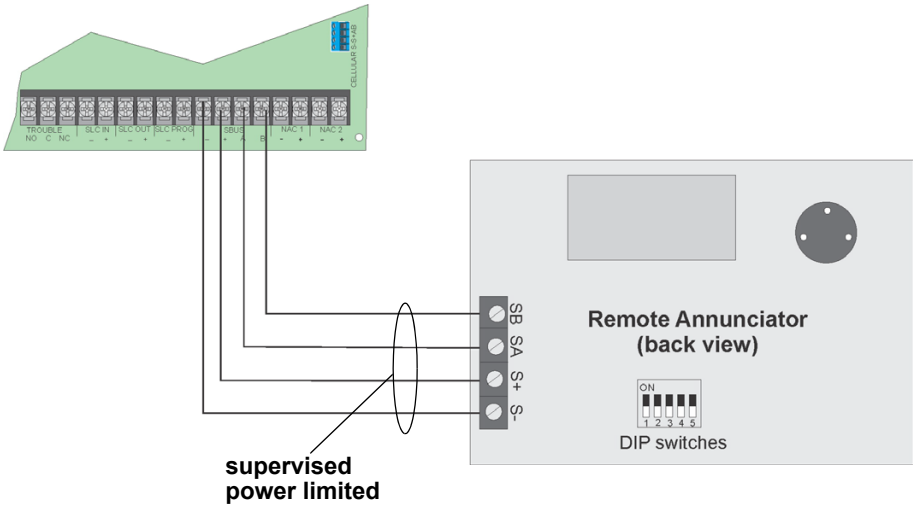

Figure 4.25 Model RA-1000 Connection to the Panel

4.7 RA-2000 Remote Annunciator Installation

The optional Model RA-2000 Remote Annunciator, shown in Figure 4.26. The RA-2000 can be surface or flush mounted. It is available in gray color as RA-2000 GRAY.

Figure 4.26 Model RA-2000GRAY Remote Annunciator, Front View

RA-2000 installation involves the following steps:

1. Make sure power is off at the panel.
2. Mount the RA-2000 in the desired location (see Section 4.7.1).
3. Connect the RA-2000 to the panel (see Section 4.7.2).
4. Use the DIP switches on the back of the RA-2000 to assign an SBUS ID# to the RA-2000 (see Section 4.11.1).
5. The RA-2000 module must be added to the system through programming. JumpStart® AutoProgramming will add the module automatically (see Section 8.1).

4.7.1 Mounting the RA-2000

This section of the manual describes mounting the remote annunciator. The annunciator can be flush or surface mounted.

Flush Mounting

This section of the manual describes flush mounting. Follow these steps to flush mount the RA-2000

1. The back box dimensions are 9¼" W x 8 3/8" H. The minimum depth required is 2". The back box can be mounted prior to the complete installation of the RA-2000 using any of the mounting holes shown in Figure 4.14.

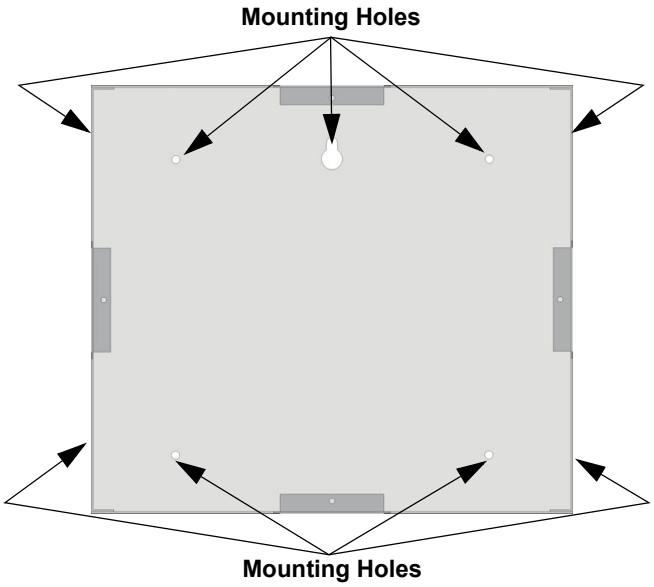

Figure 4.27 Back Box Mounting Holes

2. Remove knockout holes as needed for wires. See Figure 4.15 for backbox knockout locations.

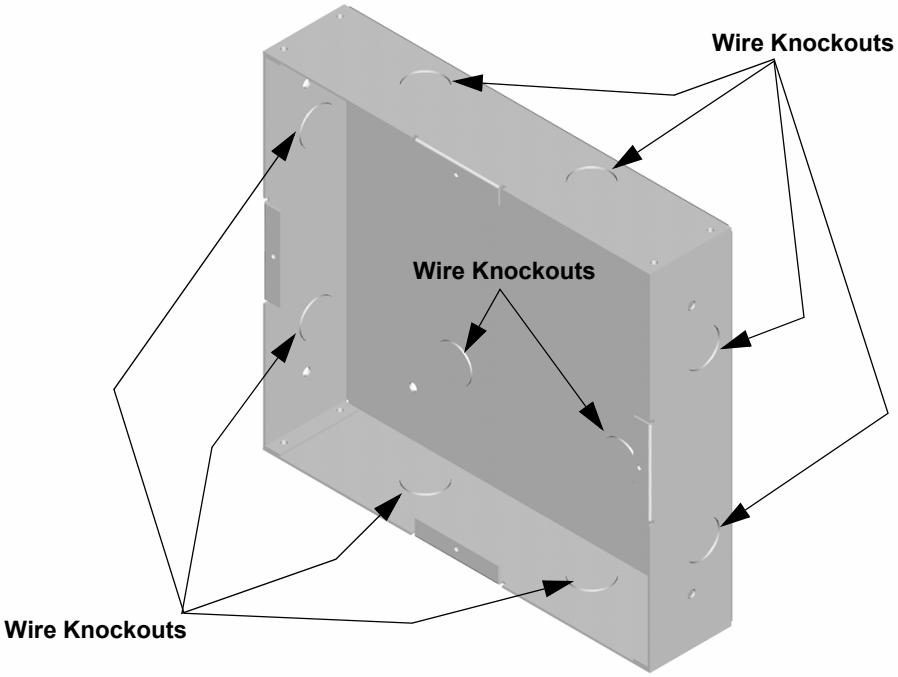

Figure 4.28 Back Box Knockout Locations

3. Wire the annunciator board to the main control panel. As described in Section 4.7.2.

4. Attach the annunciator and door assembly to back box as shown in Figure 4.16 using the supplied screws.

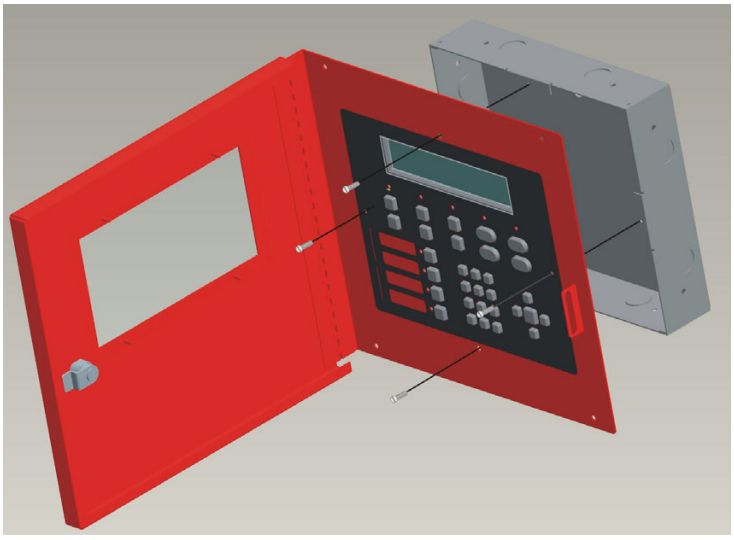

Figure 4.29 Attaching Annunciator / Door Assembly to Backbox

Surface Mounting

The Model RA-100TR red triand RA-2000GRAYTR gray trim ring kitsm are available for use when surface mounting the RA-2000.

1. Remove the desired knock out. See Figure 4.15.
2. To properly mount the back box, insert a single screw into the key shaped mounting hole. Do not tighten all the way. See Figure 4.17.

   Place a level on top of the back box, with the back box level insert the rest of the mounting screws.

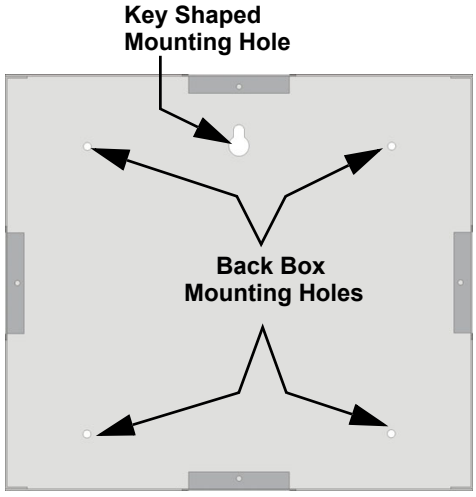

Figure 4.30 Back Box Surface Mount Holes

3. Run wires to the control panel.

4. Place the trim ring over the back box as shown in Figure 4.18.

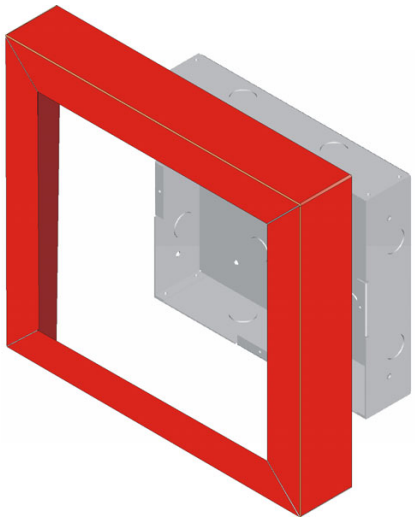

Figure 4.31 Installing Trim Ring

5. Attach the door assembly to the back box using screws provided.
6. After the SBUS wiring to the annunciator is complete, replace the electronic assembly in the back box. Place the bezel over the back box and tighten the set screws on the bezel.

4.7.2 RA-2000 Connection to the Panel

Connect the RA-2000 to the panel as shown in Figure 4.32.

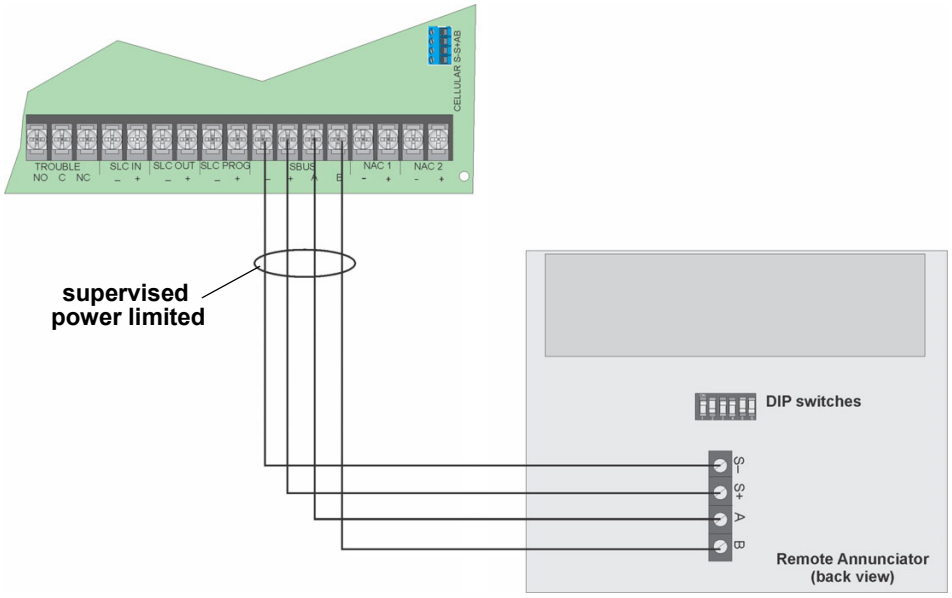

Figure 4.32 Model RA-2000 Connection to the Panel

4.8 5824 Serial/Parallel Printer Interface Module Installation

The 5824 serial/parallel printer interface module allows you to connect a printer to the panel. Printing is available for real time events, detector status and event history.

5824 installation involves the following steps:

1. Make sure power is off at the panel.
2. Connect the 5824 to the panel as shown in Figure 4.33.

NOTE: Four 5824s per panel maximum

3. Use the DIP switches on the back of the 5824 board to assign an ID# to the 5824 (see Section 4.11.1).

4. Configure the 5824 device through programming. See Section 4.8.1.
5. Connect a printer to the 5824 as shown in Figure 4.33.

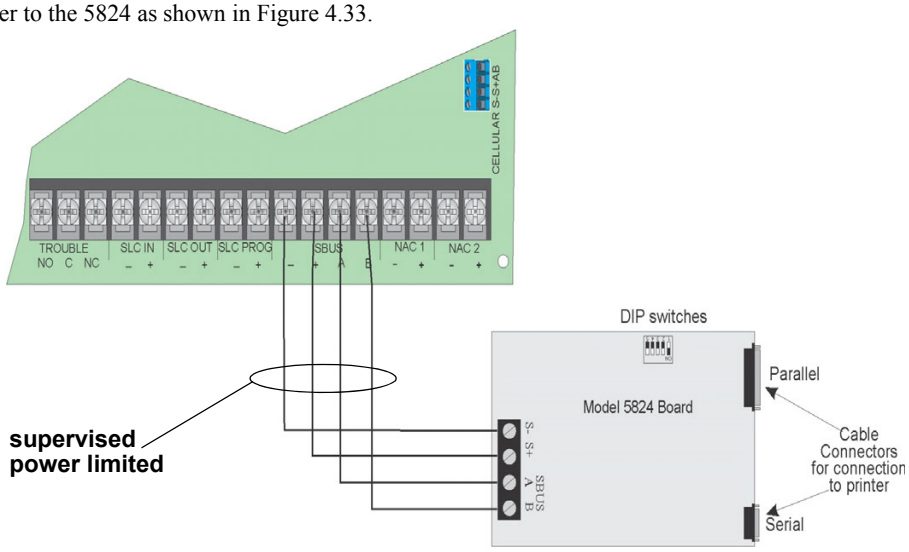

Figure 4.33 5824 Connection to the Panel

4.8.1 Selecting 5824 Options

Configuring the 5824 includes the following steps:

- Add the module to the system. JumpStart will add the module automatically (see Section 8.1). You can also add it manually (see Section 9.2.2).
- Select a name, if desired.
- Select options for the printer and the output port. See below.

■ Printer and Output Port Options

1. From the Main Menu, select 7 for Program Menu.
2. Select 1 for Module.
3. Select 1 for Edit Module.
4. From the list that displays, select the 5824 module you want to configure.
5. Press ENTER to bypass the next two screens. A screen similar to the one shown in Figure 4.34 will display.

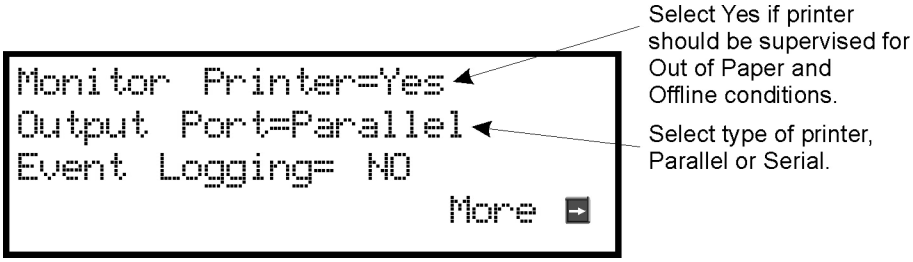

Figure 4.34 Selecting Printer and Output Port Options

6. Select options for the printer as needed for your installation. Most printers are parallel.
7. If you are using a serial printer, use the next screen to select serial port options as required for your printer. Refer to your printer manual if you need more information.

Option	Choices
Baud Rate:	75 - 19200
Data Bits:	5 - 8
Stop Bits:	.5, 1, 2
Parity:	None, Even, Odd

4.9 5880 LED Driver Module

The 5880 is an LED driver board that can be used in a wide variety of applications, including as an interface with most customized floor plan annunciator boards. The 5880 can drive up to 40 LEDs and has one PZT controller. The 5880 also has eight inputs for dry contact monitoring. Up to 8 5880s can be added to the IFP-75 system. The following sub-sections describe hardware installation. Refer to Section 6 for programming information.

4.9.1 5880 Board Layout

Figure 4.35 is a picture of the 5880 board showing locations of screw terminals for connection to the panel and contact monitor wiring; pin connectors for connecting LEDs; and the DIP switch for selecting an SBUS ID number.

Dry Contact Inputs - Supervised/Power Limited

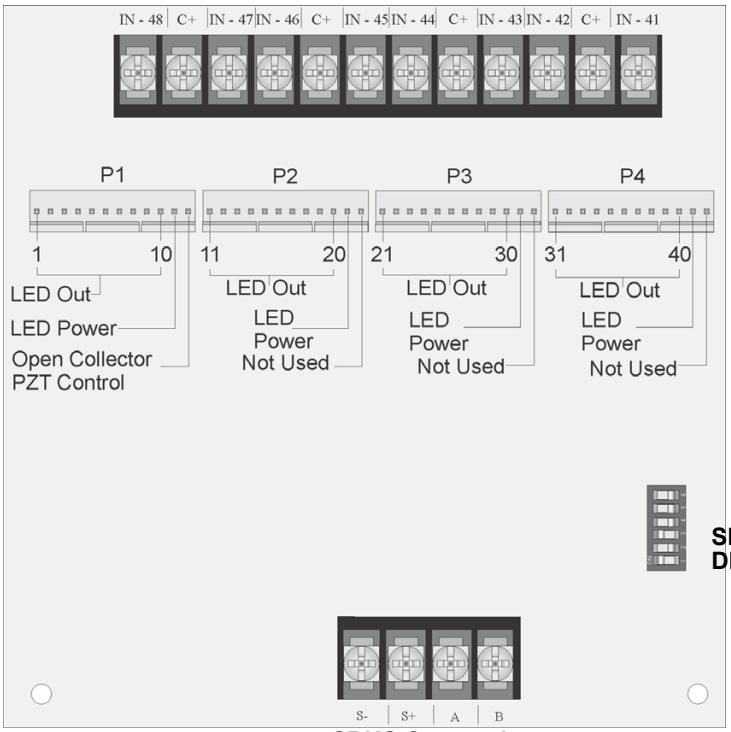

SBUS Address DIPs

SBUS Connection

Figure 4.35 5880 Board Layout

4.9.2 FACP Connection

The 5880 connects to the panel via the SBUS. Make connections as shown in Figure 4.36. After the 5880 is connected to the panel, it must be added to the system. This programming step is described in Section 9.

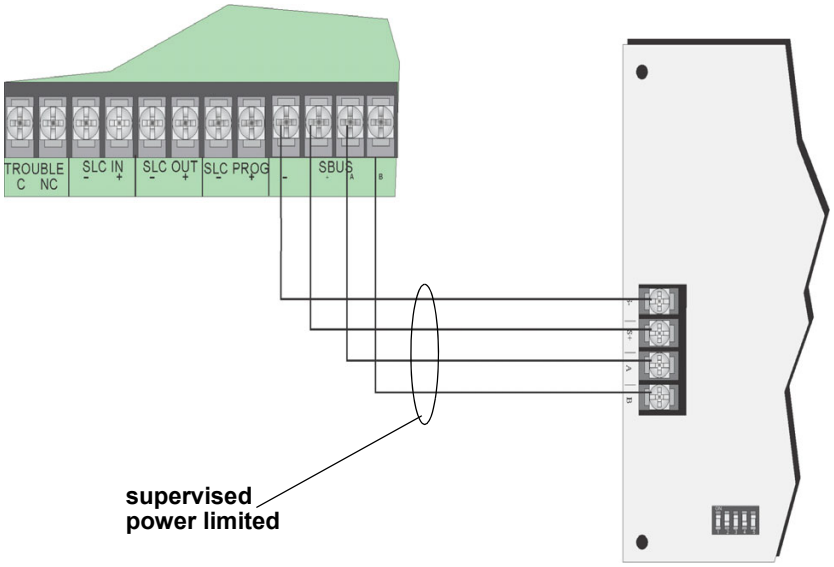

Figure 4.36 5880 Connection to Main Control Panel Assembly

4.9.3 LED Wiring

There are four 12-pin connectors on the 5880 board for connecting LEDs. Each LED gets its power from Pin 11. Internal resistors are sized so that there is approximately 10 mA of current for each LED, no series resistors are required. LED outputs can be mapped to output circuits. See Section 9 for programming details.

Wire the LEDs as shown in Figure 4.37.

On connector P1, Pin 12 is a programmable open collector output for controlling a PZT. If used, the 5880 PZT will match the PZT pattern of the on-board or remote annunciator.

NOTE: The circuit connected to "Open Collector Output" (last pin on P1) must be current limited so that no more than 100 mA of current is allowed to flow into the open collector transistor.

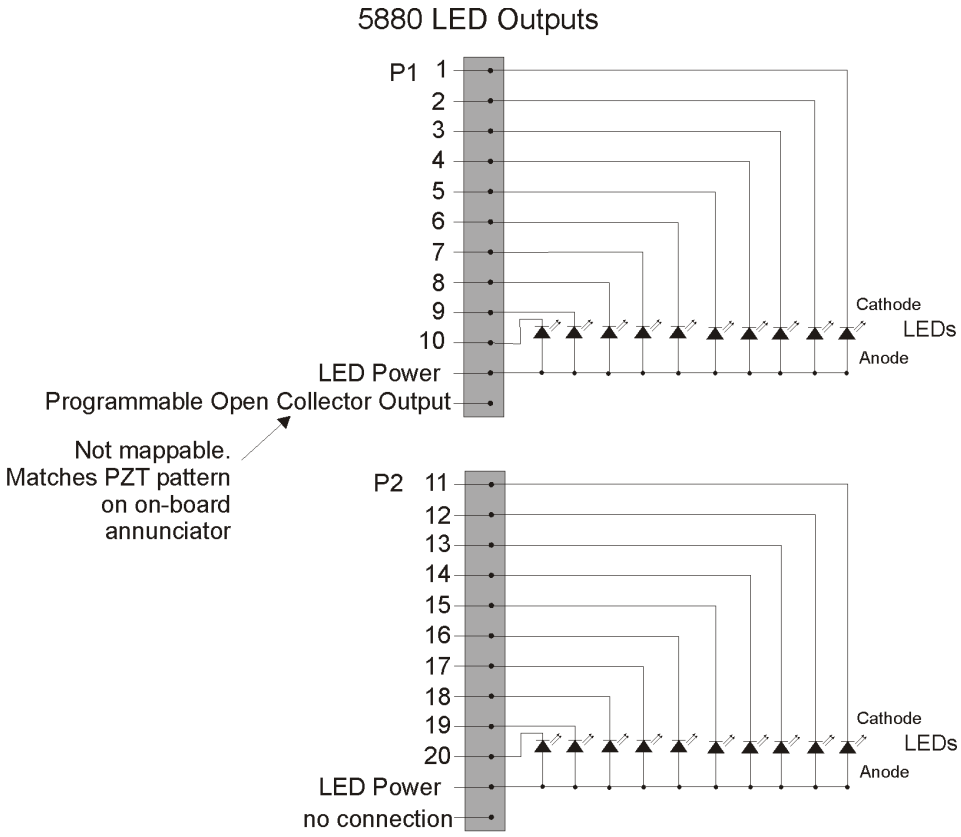

Connectors P3 and P4 wired same as P2.

Figure 4.37 5880 Board Layout

4.9.4 Dry Contact Wiring

The 8 input circuits on the 5880 board are for monitoring switch inputs-any type of switch supported by the control panel can be used with the 5880. For example, you can use a 5880 to monitor pull stations, water flow, tamper, reset, or silence switches.

Wire dry contacts as shown in Figure 4.38. Notice grouping of terminals; power terminals are shared by two inputs.

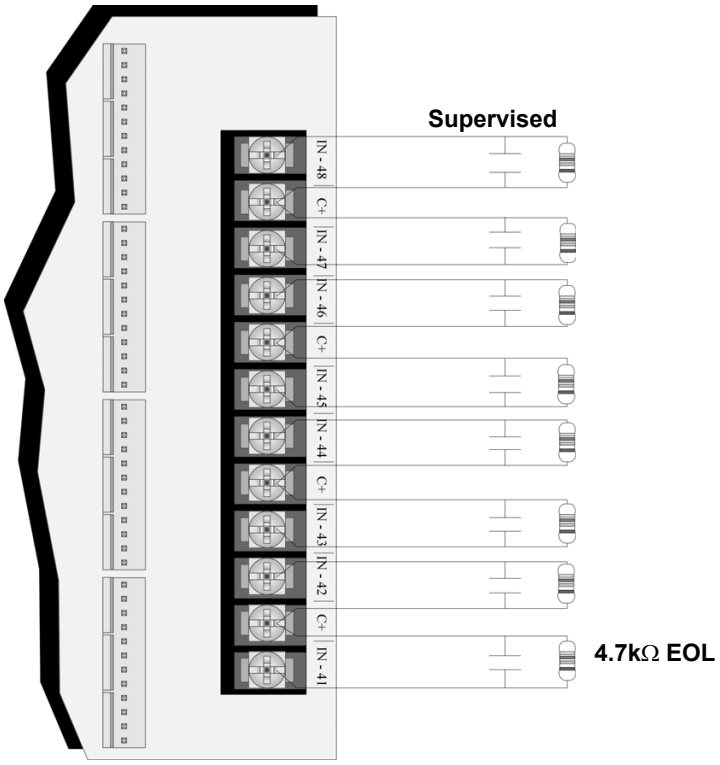

Figure 4.38 Dry Contact Wiring

4.10 5865-3 / 5865-4 LED Annunciator Installation

The 5865-3 and 5865-4 are LED annunciators. The 5865-4 has 30 mappable LEDs, remote silence and reset key switches, and a general system trouble LED. The 5865-3 has 30 mappable LEDs only. These are arranged as 15 pairs of red (typically used for alarm) and yellow (typically used for trouble) LEDs.

Installation of the 5865-3 and 5865-4 is identical. The key switches and the trouble LED follow the behavior of other system annunciators and do not require any installation steps. The following sub-sections describe how to install the 5865-3 and 5865-4 hardware. Refer to Section 6 for programming information.

NOTE: This manual uses "5865" when referring to aspects of the 5865-3 and 5865-4 that are common to both models.

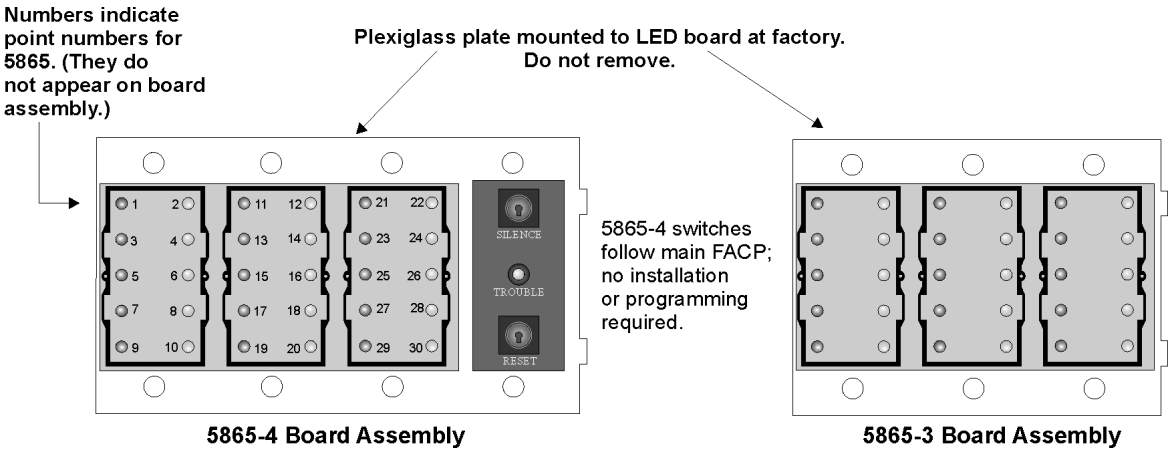

Figure 4.39 5865-3 and 5865-4 Assembly (front view)

4.10.1 FACP Connection

The 5865 connects to the panel via the SBUS. Make connections as shown in Figure 4.40. After the 5865 is connected to the panel, it must be added to the system. This programming step is described in Section 9.

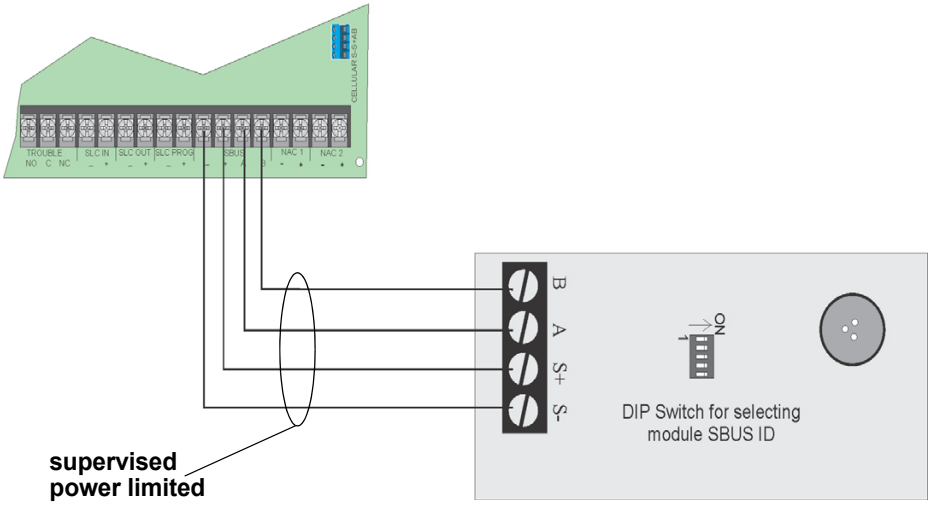

Figure 4.40 5865 Connection to the FACP

4.10.2 5865 Mounting

Mount the 5865-4 to a standard 4-gang electrical box. Mount the 5865-3 to a standard 3-gang electrical box. In Figure 4.41, the 5865-4 attached to a 4-gang box is used as an example.

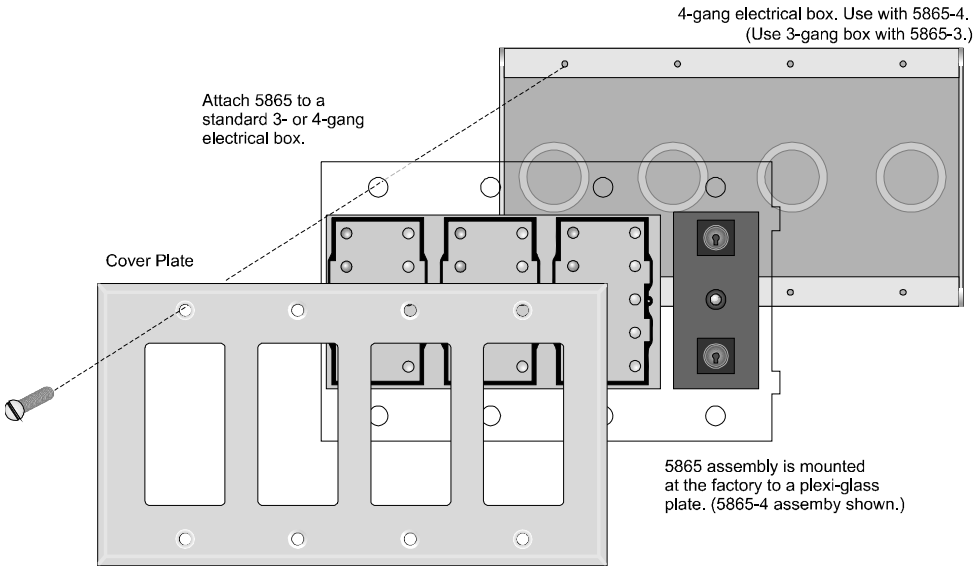

Figure 4.41 5865 Mounting Example

The 5865 ships with a set of zone description labels that can be inserted into the 5865 board assembly. These labels can be used in a typewriter or can be written on by hand.

Slide the labels under the plexiglass as shown in Figure 4.42. The LEDs will show through the label when illuminated.

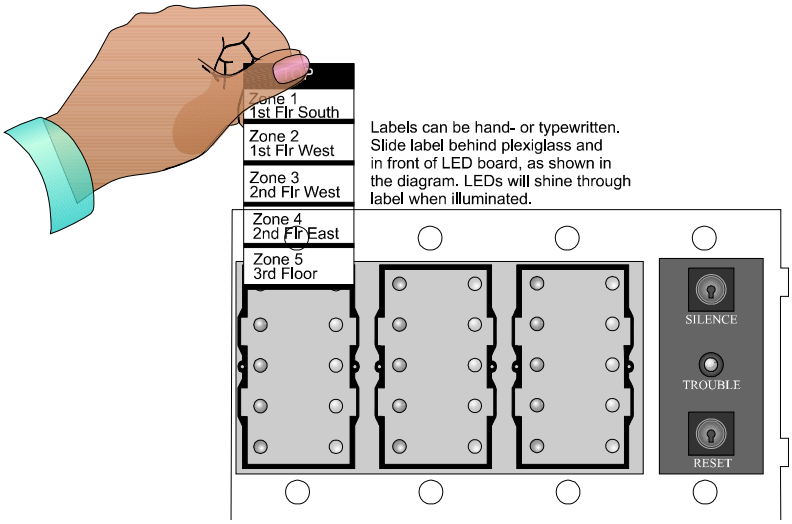

Figure 4.42 Inserting Zone Description Labels

4.11 Configuring Modules

This section describes how to configure any system hardware modules that have been added to the system.

4.11.1 Assigning Module IDs

When installing a hardware module (see Table 4.9 for list of compatible SBUS devices), you must use the DIP switches on the module to assign an ID# to the module. Figure 4.43 shows all possible DIP switch positions and their correlation to a numerical ID. For example, to select ID 2, place DIP switch 2 in the up position.

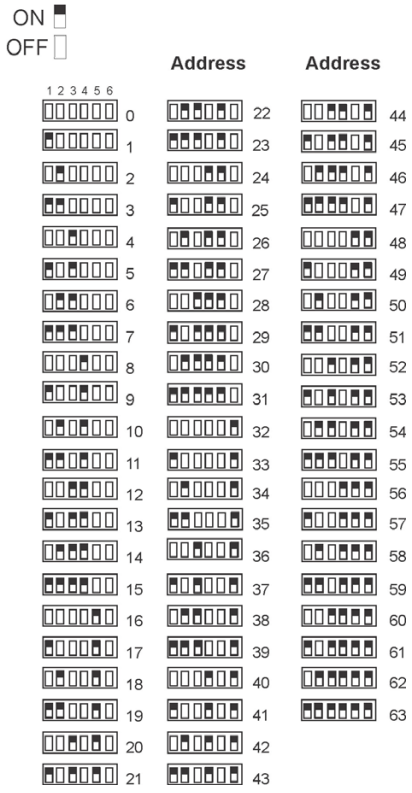

Figure 4.43 Possible module addresses

Refer to Section 9.2 to edit, add, delete, and view module list.

4.12 Telephone Connection

Connect the telephone lines as shown in Figure 4.44. The Model 7860 phone cord is available from Honeywell for this purpose.

A number of programmable options are available for customizing telephone lines. These options are described in Section 9.6.

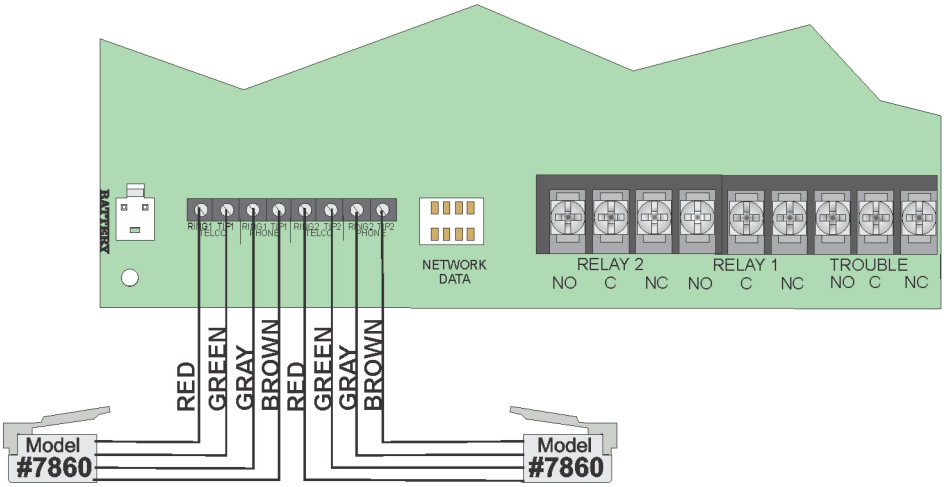

Figure 4.44 Connection of Telephone Lines

4.13 Notification Appliance/Auxiliary Power Circuits

Two outputs are built-in to the IFP-75 FACP which can be programmed to be used as NACs (Class A or Class B) or as Aux power. This section of the manual explains how to install conventional notification appliances and how these terminals can be used for auxiliary power.

4.13.1 Conventional Notification Appliance

This sub-section of the manual explains how to install conventional notification appliances for Class A and Class B configurations.

Class B Notification Wiring

You must use an appliance from the list of compatible appliances in the Appendix A at the back of this manual.

To install a Class B notification appliance circuit:

1. Wire Class B Notification appliances as shown in Figure 4.45.
2. Configure the circuit through programming (see Section 9.5).

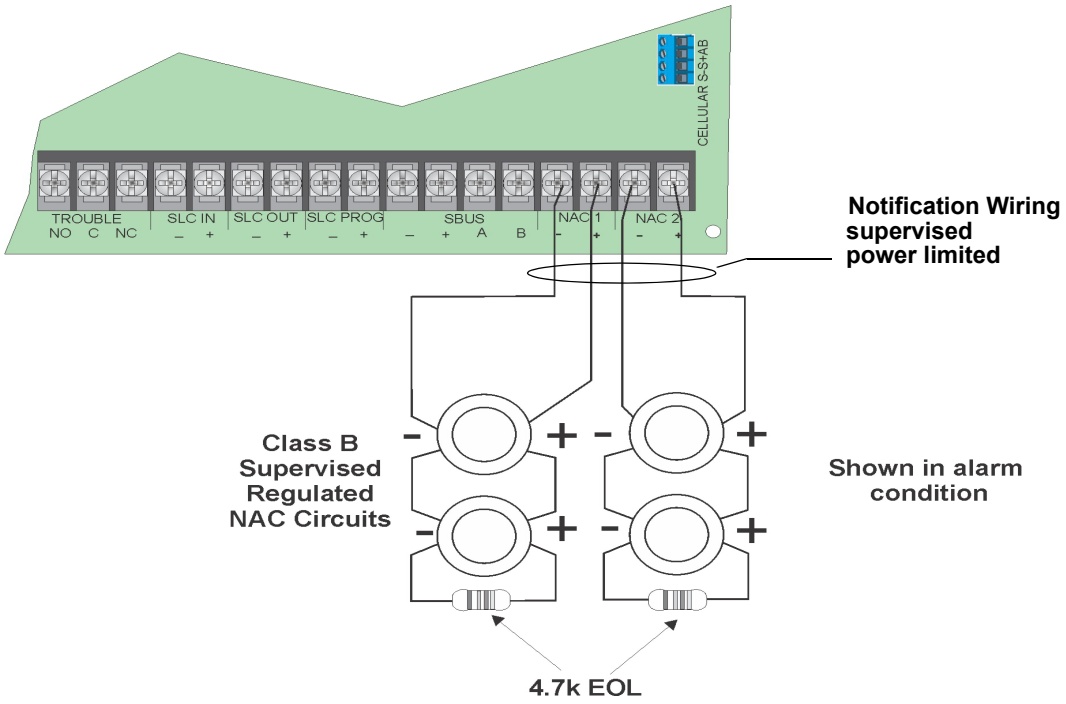

Figure 4.45 Class B Notification Appliance Circuit Wiring

Class A Notification Wiring

You must use an appliance from the list of compatible appliances in the Appendix at the back of this manual.

To install a Class A notification appliance circuit:

1. Wire the Class A notification appliances as shown in Figure 4.46.

CAUTION:

FOR PROPER SYSTEM SUPERVISION DO NOT USE LOOPED WIRE UNDER TERMINALS MARKED – AND + OF THE NAC CIRCUIT. BREAK WIRE RUNS TO PROVIDE SUPERVISION OF CONNECTIONS

2. Configure the circuit for Class A in programming (see Section 9.5).

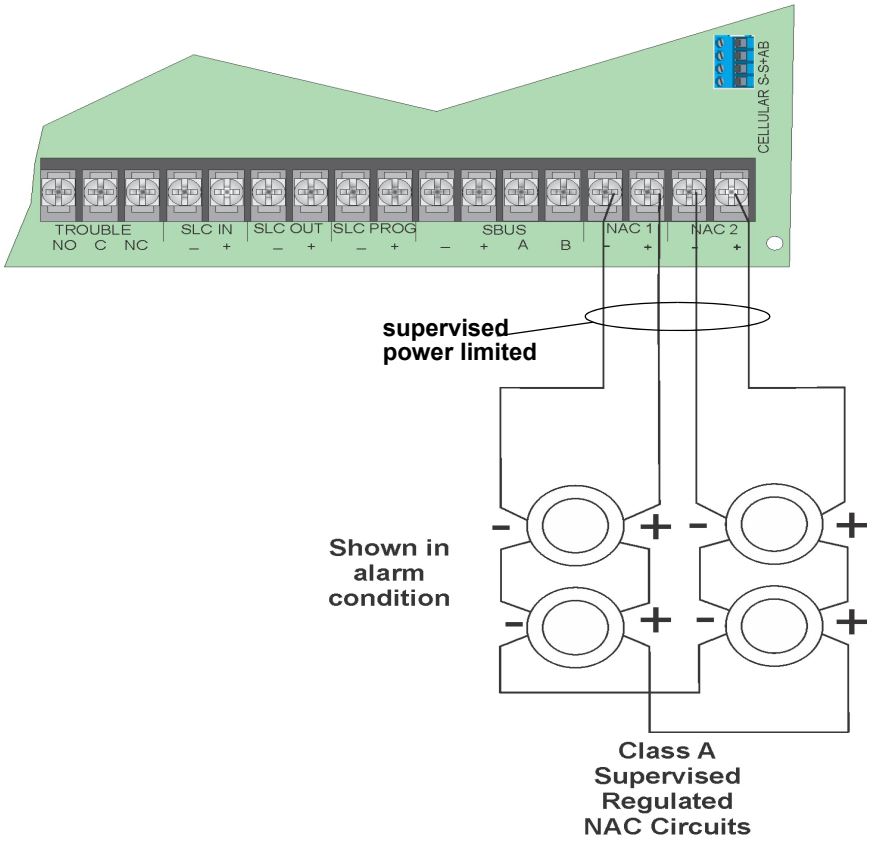

Figure 4.46 Class A Notification Appliance Circuit Configuration

4.13.2 Auxiliary Power Installation

NAC Circuits 1and 2 on the control panel can be used as auxiliary power circuits. The four types of auxiliary power available are:

- Door Holder
- Constant
- Resettable Power
- Sounder Sync Power

Auxiliary power circuits are power limited. Each circuit can source up to 2.5A in an alarm condition (total current for system must not exceed 2.5A in alarm or 1.0A for all other conditions).

To install an auxiliary power circuit:

1. Wire the NAC circuit(s) that will be used for auxiliary power. See Figure 3.2 for location of NAC circuits.
2. Configure the auxiliary power output through programming (see Section 9.5).

Door Holder Power

Door holder power is intended for fire door applications. When there are no alarms in the system and the panel has AC power, door holder circuits have 27.4 volt power present at their terminals. Any alarm will cause power to disconnect. Power will be re-applied when the system is reset. If AC power is off for more than 15 seconds, the auxiliary door holder power will be disconnected to conserve the battery backup. When AC power is restored, power is immediately restored to the door holder circuits.

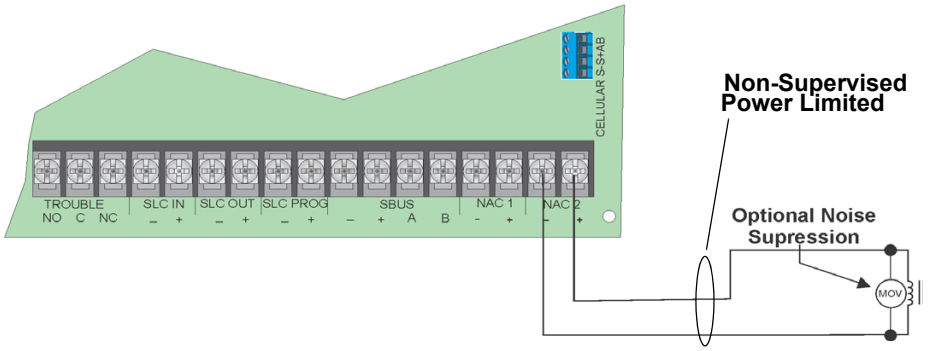

Figure 4.47 Example of an Auxiliary Power For Door Holder

NOTE: Figure 4.47 uses UL listed door holder Model 1400 from Door Control International as an example

Constant Power

Use constant power for applications that require a constant auxiliary power source. Power is always present at Constant circuits.

Resettable Power

Resettable power is typically used to power beam detectors, flame detectors and conventional 4-wire smoke detectors. For circuits selected as Resettable, 27.4 volt power is always present at the terminals unless a system reset occurs. If a system reset occurs, power is disconnected from the terminals for 30 seconds, then re-applied.

Sounder Sync Power

Sounder Sync Power continuously outputs the System Sensor synchronization pattern and is intended for use with B200S/IV sounder bases.

4.14 On-Board Relays (Conventional)

The control panel has two built-in programmable relays and a built-in trouble relay. All relays are Form C rated at 2.5 A @ 27.4 VDC Resistive.

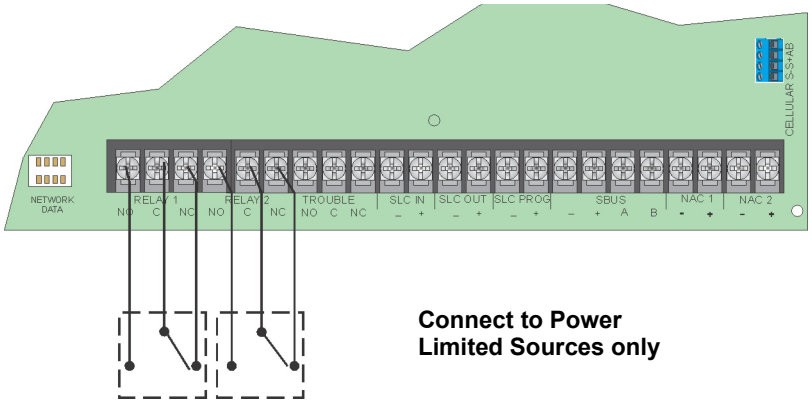

Figure 4.48 Location of Conventional Relay Circuits

NOTE: The N.C. contact is the relay contact that is closed when the panel has power and there are no alarm or trouble conditions.

4.14.1 Common Trouble Relay

The control panel has a dedicated Form C trouble relay built into terminals labeled TROUBLE. The relay provides a normally open and a normally closed contact. The trouble relay will deactivate under any trouble condition. Form C rated at 2.5 A @ 27.4 VDC Resistive.

4.14.2 Programmable Relays

The control panel has two Form C programmable relays built into terminals labeled RELAY 1 or RELAY 2. Each relay provides a normally open and a normally closed contact.

To install one or two programmable relays, follow these steps.

1. Wire Relay 1 and/or Relay 2 as needed for your application. See Figure 4.48 for the location of the relay terminals.
2. Configure the relay through programming (see Section 9.2).

4.15 Remote Station Applications

4.15.1 Keltron Model 3158 Installation

The control panel is compatible with Keltron Model 3158, used for direct connection to a Keltron receiver. The 3158 reports alarms, supervisories, and troubles. The 3158 is intended for connection to a polarity reversal circuit of a remote station receiving unit having compatible ratings.

The steps for connecting the 3158 to the control panel. Refer to the 3158 installation instructions for complete information.

1. Wire the 3158 to the control panel as shown in the connection list and Figure 4.49.
2. Wire the 3158 within 20 feet of the control panel. Wiring must be enclosed in conduit.
3. Program control panel Relay 2 for alarm.
4. Program NAC circuit 2 for alarm.
5. Program NAC circuit 1 for supervisory non latching

NOTE: NACs must be programmed for continuous and non-silencing.

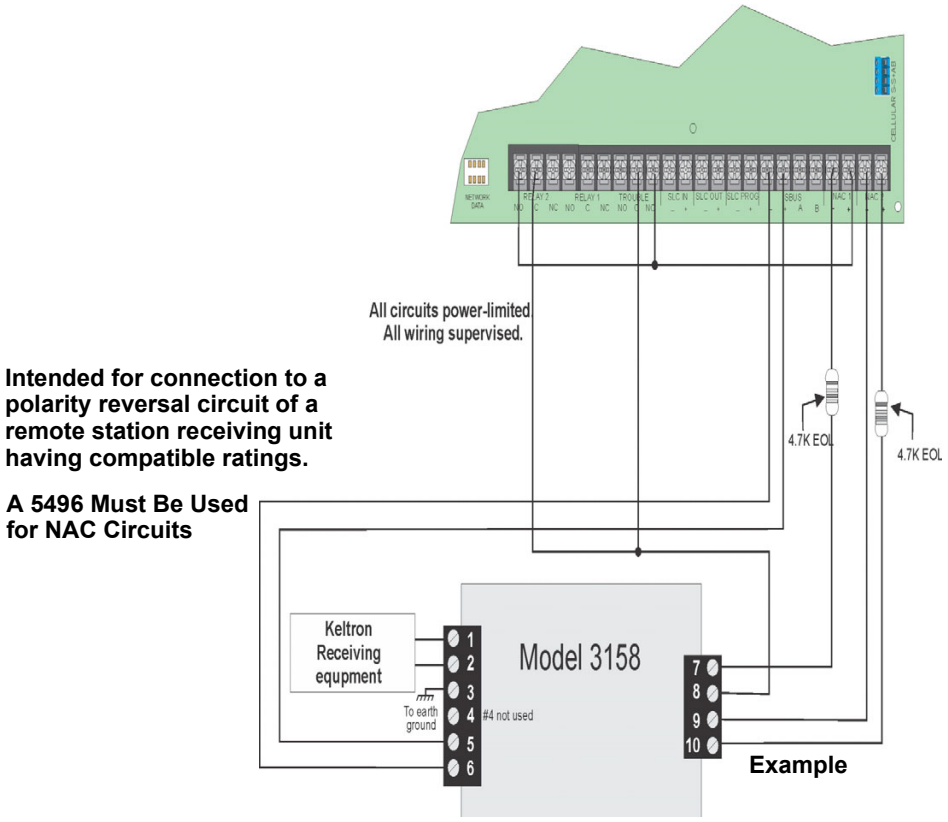

Figure 4.49 Keltron 3158 Connection to Control Panel

4.15.2 City Box Connection Using the 5220 Module

This section describes how to connect the control panel to a municipal fire alarm box or "city box" as required by NFPA 72 Auxiliary Protected Fire Alarm systems for fire alarm service. The city (master) box is an enclosure that contains a manually operated transmitter used to send an alarm to the municipal communication center which houses the central operating part of the fire alarm system.

City Box Standby Current: 0 (Notification supervision current counted for in control panel draw.)

Alarm Current:1Amp for 1 second

Max Voltage: 27.4VDC

The maximum coil and wire resistance (combined) must not exceed 30 ohms.

To install the 5220 for city box connection:

1. Use one of the knockouts on the right side of the control panel to connect the 5220 using a short piece of conduit (must not exceed 20 feet in length).
2. Wire the 5220 to the control panel as shown in Figure 4.50. This drawing also shows how to connect the city box coil to terminals 3 and 4 on the 5220. Do not install an EOL resistor in the terminals of the NAC circuit used for this application.
3. Connect earth ground wire to the 5220 chassis with mounting screw.
4. Program the NAC circuit used as a continuous and non-silencing. Refer to Section 9.5 for point programming, Section 9.4 for group settings, and Section 9.3 for zone settings and mapping.

It is not possible to reset the remote indication until you clear the condition and reset the control panel.

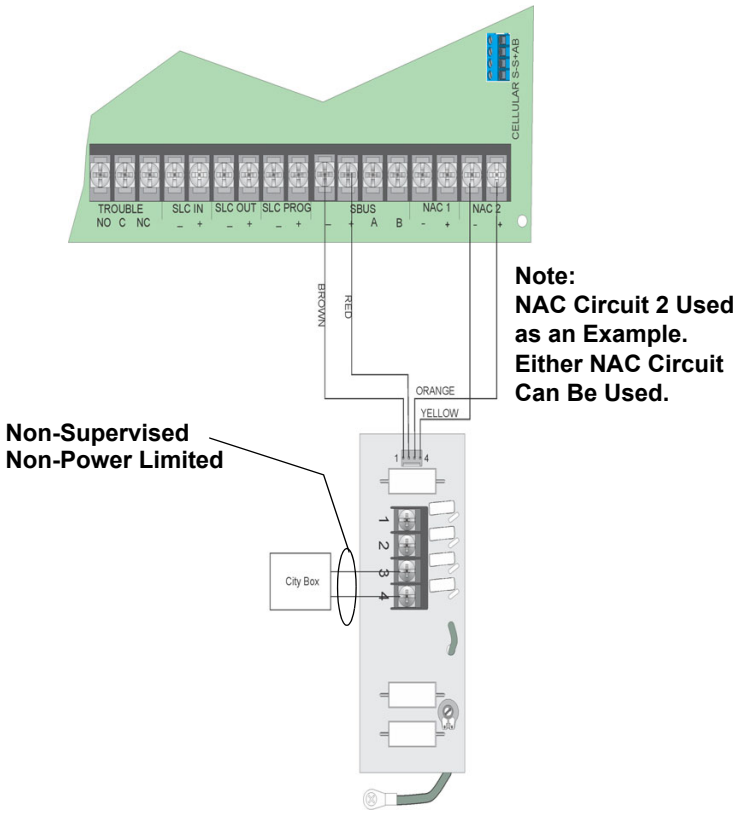

Figure 4.50 City Box Connection

4.15.3 NFPA 72 Polarity Reversal

Using the 5220 Module

When the 5220 is wired and programmed for polarity reversal, it reports alarm and trouble events to a remote site. Alarms will override trouble conditions and it will not be possible to reset the remote indicator until the condition is cleared and the control panel is reset.

If an alarm condition occurs, the alarm relay will close, overriding the trouble condition.

Standby Current:100mA

Alarm:100mA

Max. Voltage:27.4VDC

To install the 5220 for polarity reversal, follow the steps below:

1. Locate the knockout on the right side of the control panel cabinet to connect the 5220 using a short piece of conduit (must not exceed 20 feet in length).
2. Wire the 5220 to the control panel using the four-wire pigtail provided as shown in Figure 4.51. This diagram also shows how to connect the 5220 to the remote indicator. Do not install an EOL resistor in the terminals of the NAC circuit used for this application.
3. Connect earth ground wire to the 5220 chassis with mounting screw.
4. Program the NAC circuit used as continuous and non-silencing. Refer to Section 9.5 for point programming, Section 9.4 for group settings, and Section 9.3 for zone settings and mapping.

5. If necessary, adjust loop current using the potentiometer (R10) on the 5220 board. Normal loop current is 2-to-8 mA with a 1k ohm remote station receiving unit. Maximum loop resistance is 3k ohm.

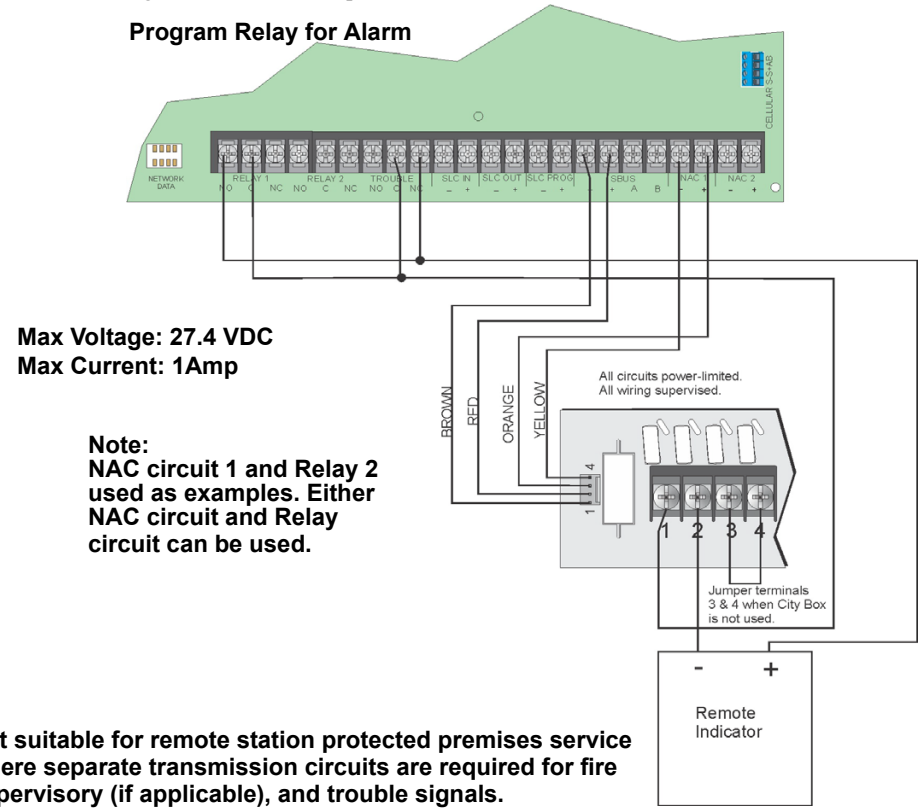

Figure 4.51 Polarity Reversal Connection Using the 5220 Module

Using the 7644-L8 Module

When the 7644-L8 is used for polarity reversal, it allows alarm and trouble events to be reported to a remote site. Alarms will override trouble conditions and it will not be possible to reset the remote indicator until the condition is cleared and the control panel is reset.

To install the 7644-L8 for polarity reversal:

1. Wire the 7644-L8 to the control panel as shown in Figure 4.52. Do not install an EOL resistor on the terminals of the NAC circuit used.

NOTE: Use only NAC circuits on the control panel for reverse polarity.

2. Program the NAC circuit as a notification circuit. See Section 9.5.2.
3. Map the group to activate non silenceable, constant on in response to a system general alarm, and to discuss in response to a system trouble.
4. Intended for connection to a polarity reversal circuit of a remote station receiving unit having compatible rating.

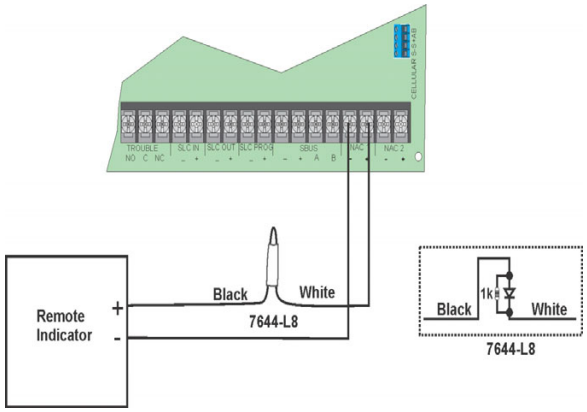

Figure 4.52 Polarity Reversal Connection Using the 7644-L8

4.15.4 Using a MR-201/T Control Relay From Air Products

When the MR-201/T control relay is wired for polarity reversal, it reports alarm and trouble events to a remote site. Alarms will override trouble conditions and it will not be possible to reset the remote indicator until the condition is cleared and the control panel is reset.

If an alarm condition occurs, the alarm relay will close, overriding the trouble condition.

Current: 15mA max.

Operating Voltage: 24VDC nominal; 27.4 VDC max.

Resistance: 4KΩ

To install the MR-201/T for polarity reversal, follow the steps below:

1. Wire the MR-201/T as shown in Figure 4.53.

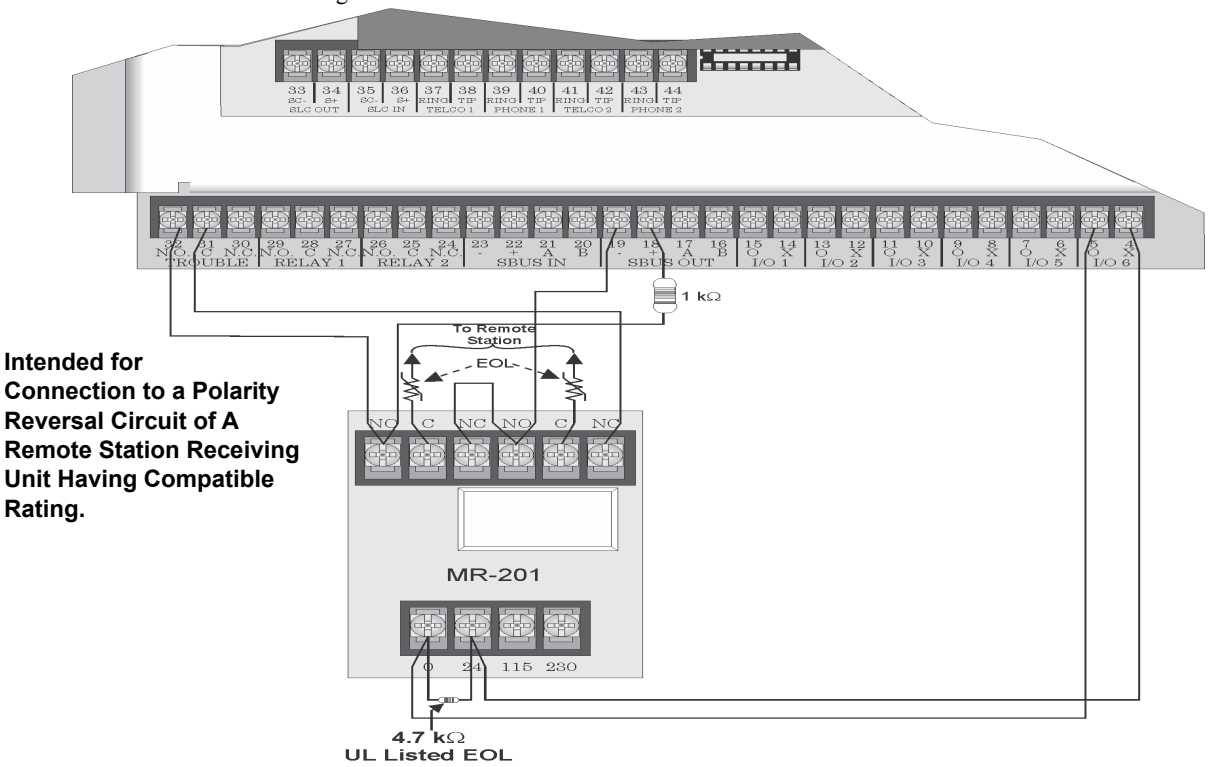

Figure 4.53 Polarity Reversal Connection Using the MR-201/T Relay

2. Program the NAC circuit for non silence NAC circuit (see Section 9.5.2).

NOTE: If you need to transmit supervisories or trouble conditions, additional relay modules must be added. Use relay 1 to transmit supervisory conditions. Use the trouble relay to transmit trouble conditions.

4.15.5 Transmitter Activated by Dry Contacts

This section describes the connection of a UL 864 listed remote station transmitter to the IFP-75 FACP dry contacts. The FACP contacts must be supervised by the remote station transmitter module using end-of-line resistors (ELRs) with a value determined by the transmitter manufacturer. Power is also provided by the remote station transmitter manufacturer. Refer to the remote station transmitter manufacturer's manual for details.

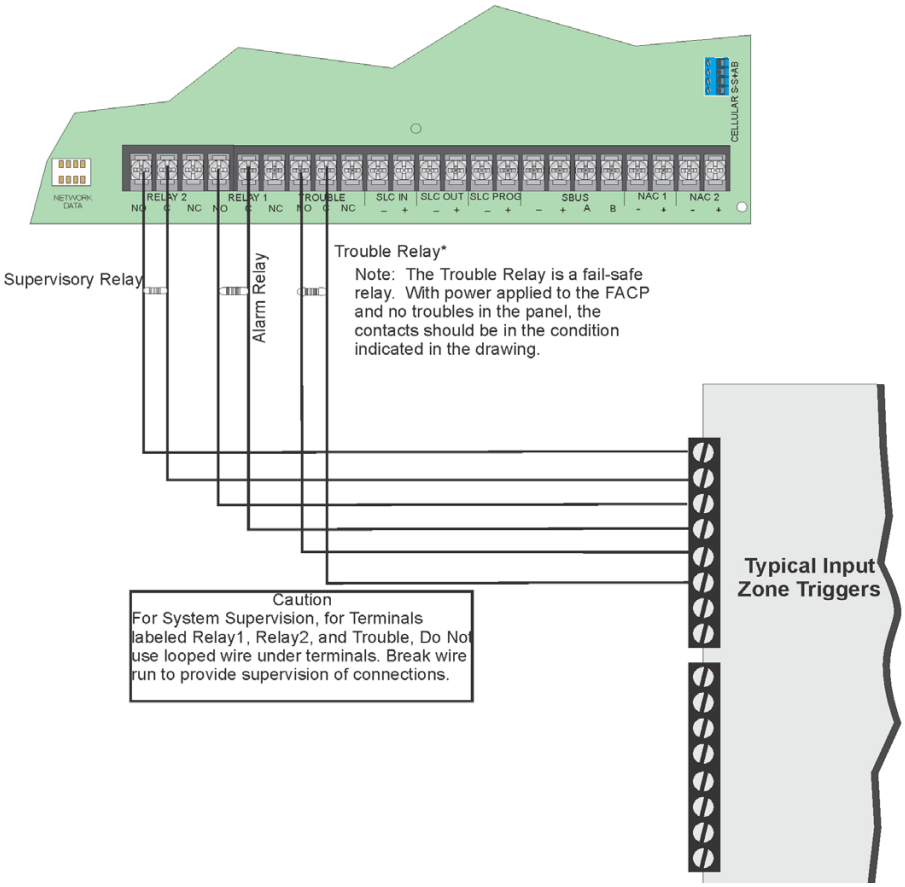

Section 5: Networking

5.1 Network System Hardware Features

The IFP-75 panel can be networked to create a virtual system that is larger than150 addressable points. Each additional IFP-75 provides another 150 addressable points to the network total. For example, a network of 32 IFP-75 panels provides a maximum addressable point capacity of 2,550 points (150 x 32= 4,800 IDP or SK devices).

5.1.1 Networked Panels

A networked site is a logical group of IFP-75 panels that behave as though the logical group is one large control panel. Each building is referred to as a "site." All panels in a site operate as a single panel. The control functions like reset, silence and alarm activation operate across the entire site. There can be one or more logical sites within a networked system. Taken to the extreme, the maximum number of sites within a network system is limited to the number of panels in the network with each site comprised of only one panel.

5.1.2 Wiring Options to Connect Networked Panels

1. Fiber Optic Single Mode - Use the SK-NIC and SK-FSL for up to 30dB loss of signal separation. SK-FSL connects to the network using 9/125 micron single-mode fiber.
2. Fiber Optic Multi-Mode - Use the SK-NIC and SK-FM for up to 8dB loss of signal separation SK- FML connects to the network using 62.5/125 micron multi-mode fiber.
3. Twisted Pair Copper Wire - must use the SK-NIC to provide up to 3000 feet of separation.

All methods of panel connectivity can be used within the same networked system. The network architecture provides true peer to peer capability allowing network survivability for all hardware that remains operational in the event of partial system failure.

5.2 Direct Connect Wiring Option

When networking a group of IFP-75 you must use the SK-NIC to link the panels together. See Figure 5.54 for external mounting of SK-NIC option.

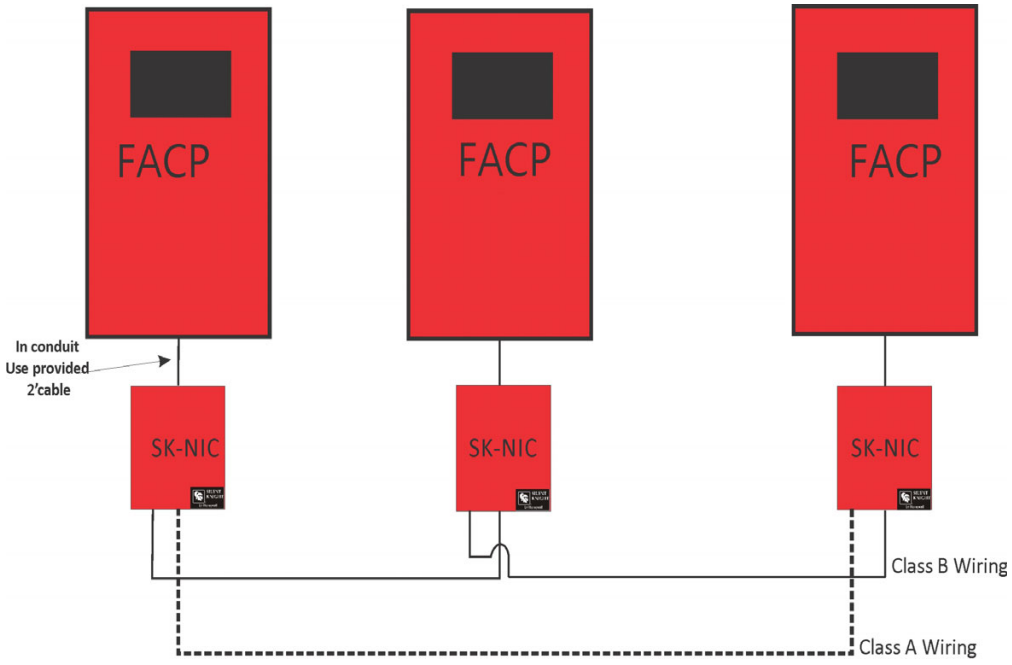

Figure 5.54 EXTERNAL SK-NIC Wiring Option

5.3 SK-NIC Wiring Options

Networking a group of IFP-75s requires the use of a network interface card with each panel. The SK-NIC connects to other networked units using unshielded, twisted-pair wiring or fiber-optic cable.

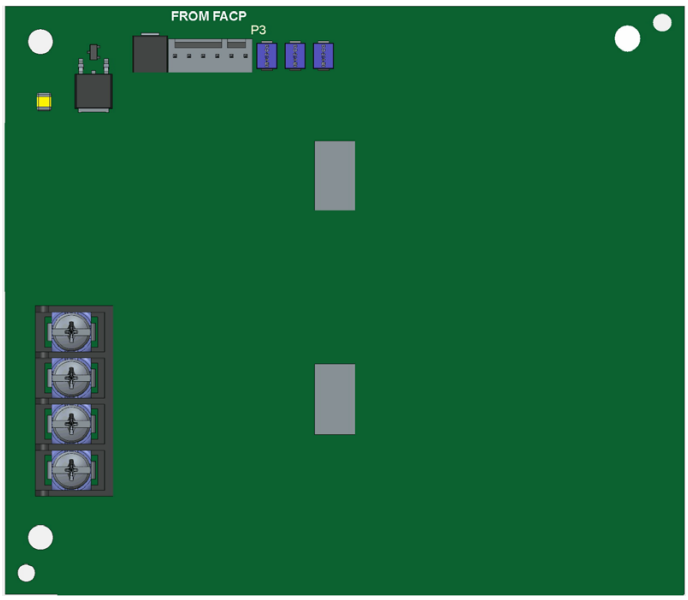

Figure 5.55 SK-NIC Network Interface Card

5.3.1 Fiber Loop Modules

Two types of fiber optic modules are available to use to transmit and receive communication with the SK-NIC. See Figure 5.56.

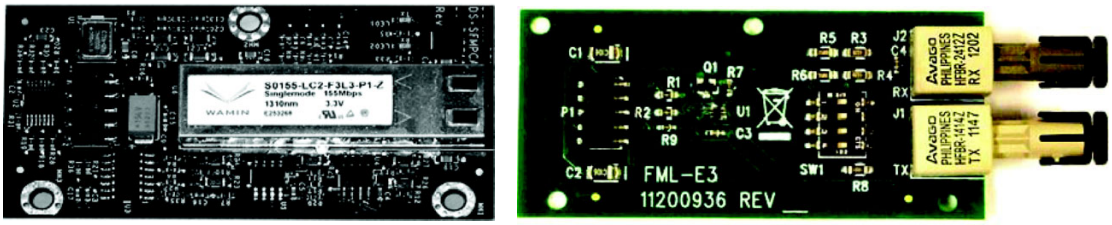

SK-FSL Single-Mode Fiber SK-FML Multi-Mode Fiber

Figure 5.56 Types Fiber Loop Modules

The SK-FML (Fiber-Optic Multi-Mode) and SK-FSL (Fiber-Optic Single-Mode) are plug-in fiber loop modules. The two types of fiber optic modules are used as one channel to transmit or receive communications with the SK-NIC, ARCNET communication circuit.

The following describe the two types of fiber optic modules.

- The SK-FML is a fiber module that allows the multi-mode fiber to network between nodes.
- The SK-FSL is a fiber module that allows the single-mode fiber to network between nodes.

Each fiber loop module can Transmit (TX) and Receive (RX) fiber-optic cable connecting to the SK-NIC. Up to two fiber loop cards can be added to the SK-NIC, and both cards may be combined in the same configuration. See Figure 5.57.

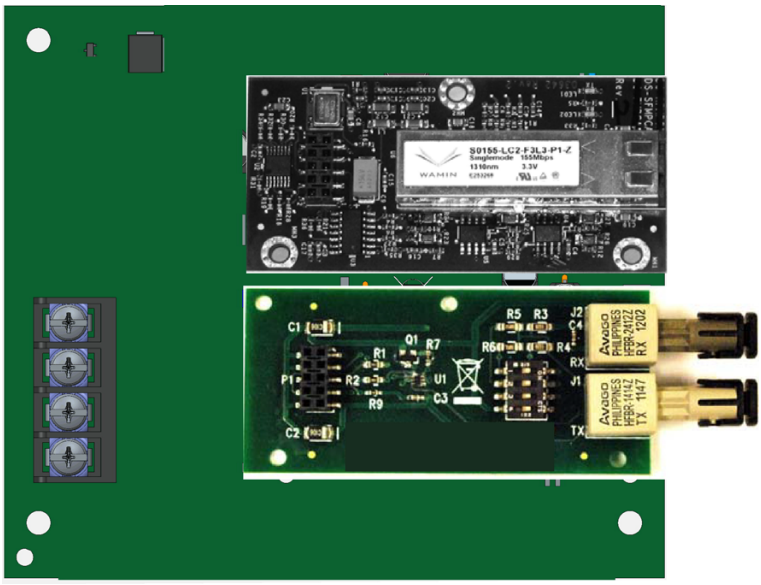

Figure 5.57 SK-NIC with Fiber Loop Modules

SK-NIC-KIT Mounting Kit

SK-NIC can be mounted in an accessory cabinet. Accessory kits P/N SK-NIC-KIT are available that include a SK-NIC, small cabinet with door, cable & mounting hardware. The accessory kit is necessary to install the SK-NIC outside of the IFP-75 cabinet.

5.3.2 SK-NIC Installation

The SK-NIC is designed to mount on the bracket inside the accessory cabinet. Use the following steps to properly mount the SK-NIC-KIT.

1. Place the SK-NIC on the mounting bracket.
2. Use the 6-pin cable included with SK-NIC to connect the IFP-75 to the SK-NIC. The 6-pin cable must be run in conduit. See Figure 5.54.

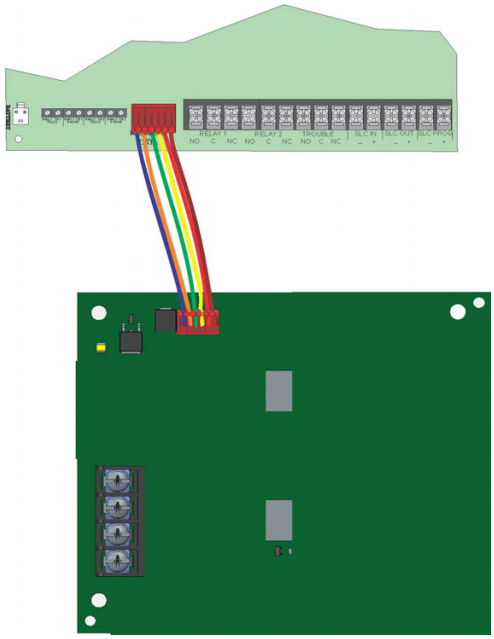

Figure 5.58 Panel to SK-NIC connection

3. Each SK-NIC has the ability to monitor for earth ground faults on the twisted pairs connected to Port 1 of its terminal block TB2. Earth fault detection for any wiring at Port 2 of TB2 is done at the next/previous SK-NIC due to these wiring connections being connected to Port 1 of TB2 at the next/previous SK-NIC.

4. Unused optic ports on fiber loop modules must have their dust caps placed on the port.
5. Based on the type of data medium chosen, run the twisted pair wiring/fiber optic cable to the next SK-NIC using a class B or class A wiring method. A combination of both medium types can be used. See Figure 5.59, Figure 5.60, Figure 5.61, and Figure 5.62 for SK-NIC wiring examples.

Unshielded Twisted Pair Wiring between Multiple Panels

Unshielded twisted pair wiring between multiple panels is shown in Figure 5.59. Class A wiring is shown with a dotted line.

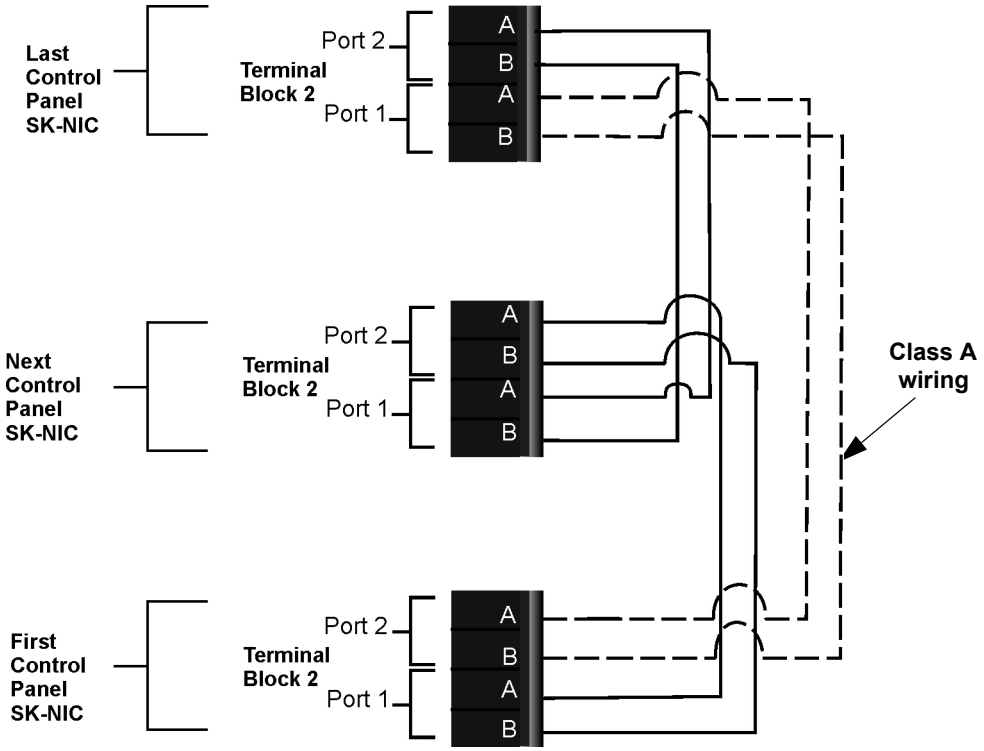

Figure 5.59 Twisted Pair Wiring Configuration

Fiber Optic Multi-Mode Wiring between Multiple Panels

Fiber optic cable between multiple panels is shown in Figure 5.60. Class A is shown with a dotted line.

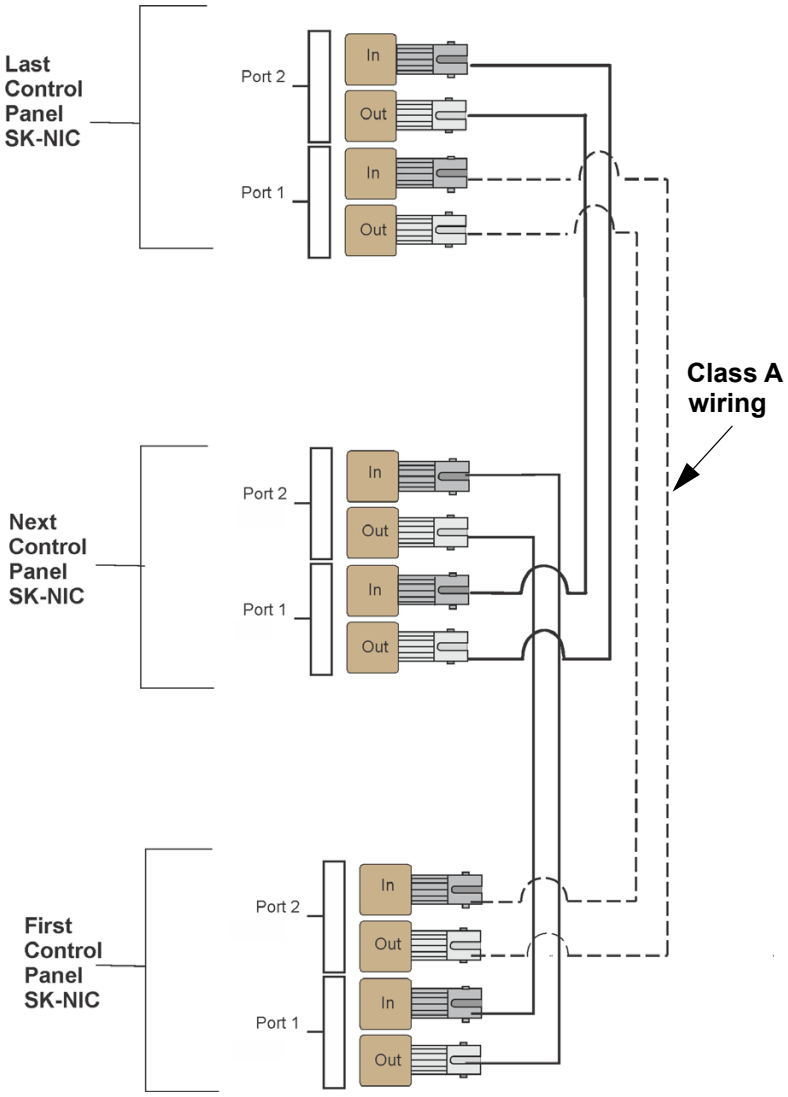

Figure 5.60 Fiber Optic Wiring Example

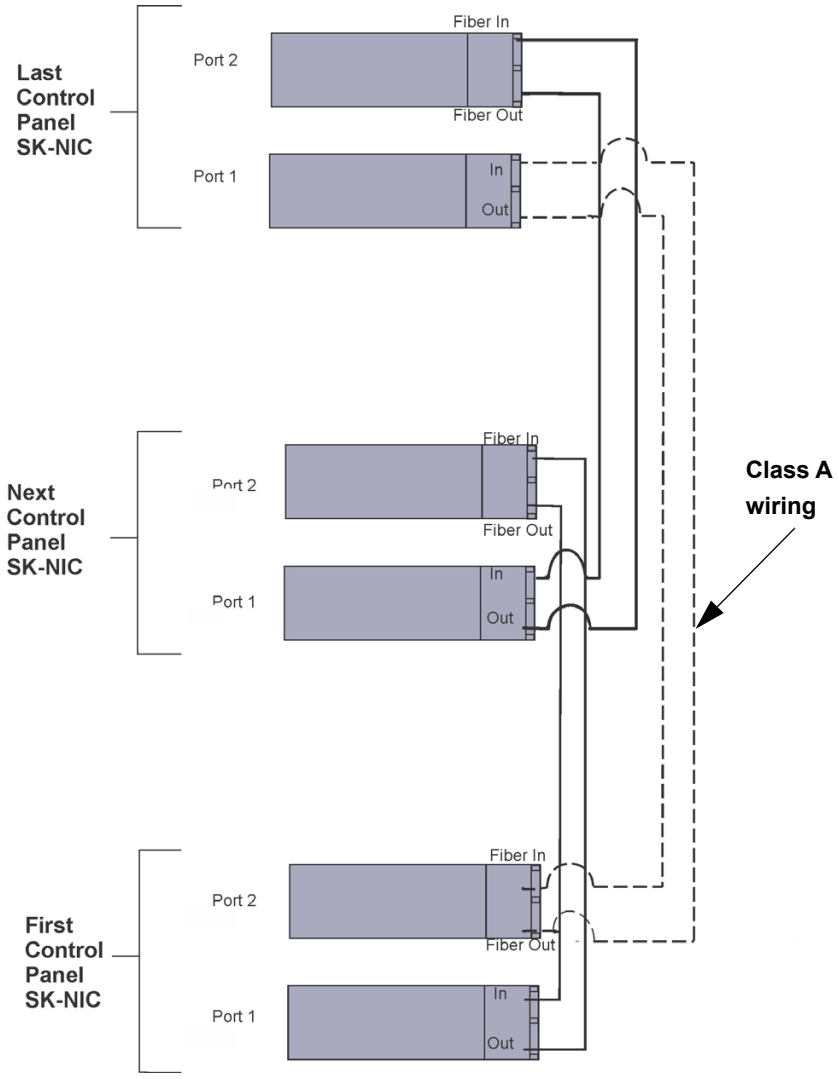

Figure 5.61 Fiber Optic Wiring Single-Mode Example

Fiber Optic and Twisted Pair Wiring between Multiple Panels

A mixture of fiber optic cable and twisted pair wiring between multiple panels is shown in Figure 5.62. Class A cabling is shown with dotted line.

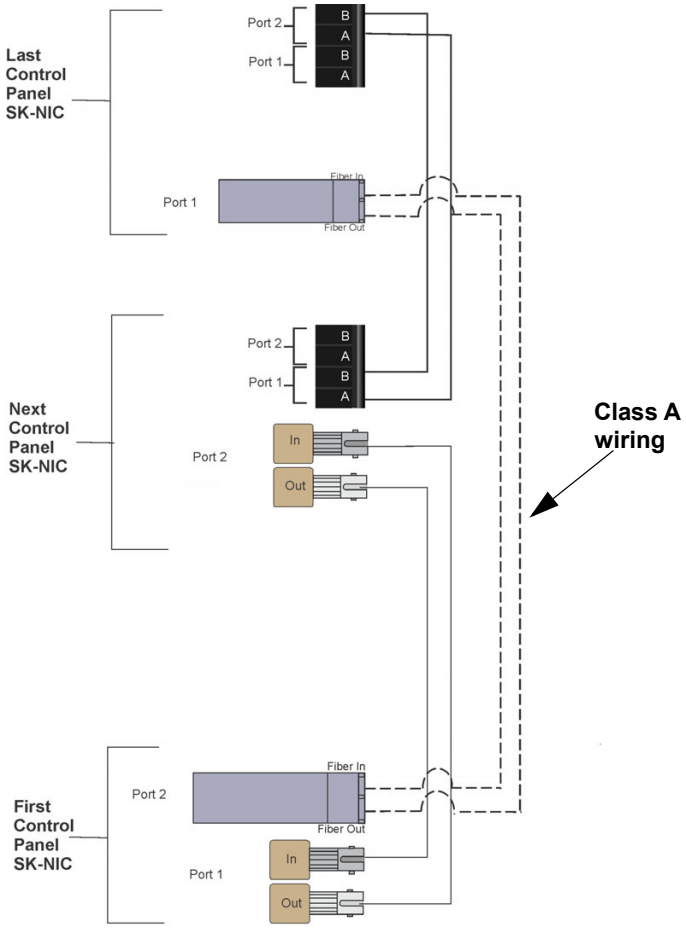

Figure 5.62 Twisted Pair and Fiber Optic Combination Wiring Example

5.4 Setting the Panel ID for each Panel Network

NOTE: It is important that much thought is given when choosing the network IDs for each panel. It is difficult to change the IDs once panel programming has begun.

The network ID for each panel is set using DIP switch positions 1 through 5. See Figure 5.63 below for possible DIP switch settings.

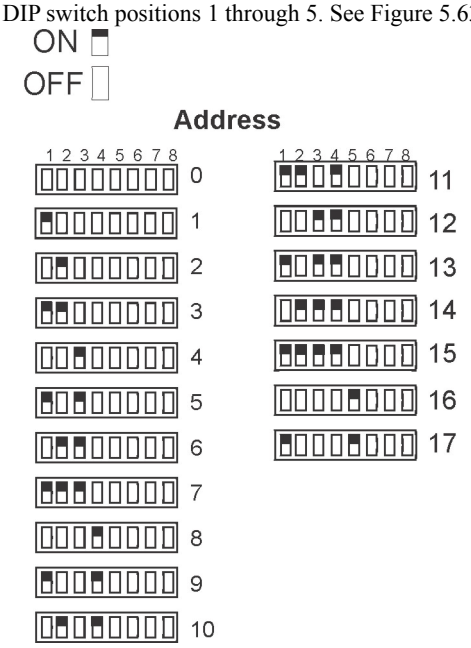

Figure 5.63 Network ID Settings

Section 6: Network Management

6.1 Network Diagnostics

6.1.1 Ping Panel

The Ping Panel menu allows you to continually ping any panel programmed into the network. As the selected panel is being pinged, the Ping Panel screen will display the reply time, minimum and maximum reply times, and sent and received counters.

1. Enter the Installer Code. The panel will automatically go to the main menu.
2. Select 5 for Network Diagnostics.
3. Press 1 to enter the Ping Panel Menu.
4. Press the up or down arrow key to select Network Panel ID. Press ENTER to Ping panel.

6.1.2 Data Network Status

The Data Network Status screen will display statistics that are indicators of Network performance.

1. Enter the Installer Code. The panel will automatically go to the main menu.
2. Select 5 for Network Diagnostics.
3. Press 2 to enter the Data Network Status menu.

6.2 Network Programming

This section of the manual describes how to program network options using the built-in annunciator. All options described in this section can be programmed using the HFSS Honeywell Fire Software Suite. To edit site assignments, HFSS must be utilized.

6.2.1 Learn Network

The Learn Network menu shows you all of the panels connected to the network. Any panel that has been programmed into the network will appear as a "member." Any panel that is connected to the network but not programmed into the network will appear as a "guest." You can add guest panels to the network by changing their status to member in this menu. Panels showing OK are currently responding on the network. Panels not showing OK have either been removed or are not responding due to networking problems. See Figure 6.1 for Network Diagnostics.

1. Enter the Installer Code. The panel will automatically go to the main menu.
2. Select 6 for Network Programming.
3. Press 1 to enter the Learn Network menu.
4. Press ENTER to add or remove panels connected to the network as member or guest.

NOTE: If adding panels to network, the system will automatically run the Sync Network Options. You will be required to select which panel to distribute network options from. See Section 6.3.

6.2.2 Edit Network Names

The Edit Network menu allows you to edit the panel name and edit the panels site name.

■ To Edit Panel Names:

1. Enter the Installer Code. The panel will automatically go to the main menu.
2. Select 6 for Network Programming.
3. Press 2 to enter the Edit Network Names menu.
4. Press 1 to Edit Panel Name. Choose Panel to edit.

■ To Edit Site Names:

5. Press 2 to Edit Site Name. Choose Site to edit.

See Appendix B for a list of available characters and their numeric designators.

6.2.3 Edit Panel ID

This menu option allows you to change the current Network Panel ID. It is best to carefully consider the network ID setting for each panel. Take into account any future panels that will be added to the network (future wiring of two buildings together). The Network Panel ID setting has to be unique for each panel on the network.

This menu will allow you to change the currently assigned Network Panel ID to the current Network ID dip switch setting. The system will be down as the panel needs to reboot in order to complete the transition.

When using the PC configuration software to program the panels, the Network Panel ID will be locked from future editing. The only way to change it will be to restore defaults and use this menu again.

■ To Edit the Network Panel ID:

1. Enter the installer code. The panel will automatically go to the main menu.
2. Select 6 for Network Programming.
3. Press 3 to enter the Edit Panel ID menu.

4. If the Network Panel ID is changed and valid, the system will ask you to confirm the change. If it is not correct, you can change the dip switches at this time.
5. Press up to select YES and press ENTER to confirm.

6.2.4 Computer Access

An installer at the panel site can initiate communications between the panel and a computer running the HFSS Honeywell Fire Software Suite (see also Section 10.5). In order for this communication to function properly, both the computer (running the software) and the control panel must have matching computer access numbers and computer codes.

To program computer access information:

1. Enter the installer code. The panel will automatically go to the main menu.
2. Select 6 for Network Programming.
3. Press 4 to enter the Computer Access menu.
4. Enter the computer access number (up to 6-digits), then press ENTER.
5. Enter the computer code, then press ENTER.

6.2.5 Access Codes

Access codes provide the user access to the control panel functions. Each access code can be customized for each user. This allows some users the ability to access programming and other higher level panel functions, while other users may only need access to lower level functions such as preforming fire drills, or acknowledging trouble conditions.

Profile 1 is the profile that dictates what functions the Fire Fighter Key has access to. Because this is the profile for a key, the user name and the access code can not be edited for this profile.

Profile 2 is the profile for the installer and is referred to as the “Installer Code”. This profile’s user name and panel functions can not be edited. Table 6.12 lists the panel functions that can be selected for each user profile.

Type of Function	Selectable Functions
Panel Operations	System Reset
	System Silence
	System Ack
	Fire Drill Key
	*F1 Function Key
	*F2 Function Key
	*F3 Function Key
	*F4 Function Key
Panel Menus	System Tests
	Fire Drill Menu
	Indicator Test
	Walk Test-No Report
	Walk Test -With Report
	Communicator Test
	Clear History Buffer
	Point Functions
	Disable/Enable Point
	Point Status
	Set SLC Device Address
	SLC Single Device Locator
	SLC Multiple Device Locator
	I/O Point Control
	Event History
	Set Time & Date
	System Information
	Network Diagnostics
	Network Programming
	Panel Programming
	Send/Receive Firmware Update

Table 6.12 : User Profile Selectable Panel Functions

*Function Keys are only available on the RA-2000 LCD annunciator

To change an access code:

1. Enter the installer code. The panel will automatically go to the main menu.
2. Select 6 for Network Programming Menu.
3. Select 5 for Access Codes.

Display reads: *Select Profile 01*
Fire Fighter's Key

4. Select the access code you wish to edit by pressing the up or down arrow key.
5. Then press ENTER.

■ Profile Edit Menu

From the Profile Edit Menu you can change the users name, access code, and the panel functions that the user will have access to with their code.

NOTE: Profile 1 (Fire Fighter's Key) the user name and access code can not be edited. Profile 2 (Installer) the user name and panel functions can not be edited. Profile 3 (Multi-Site Installer) is defaulted with the Multi-Site access option, but the entire profile can be edited.

Edit Name

6. See Appendix B for a list of available characters and their numeric designators.
7. Then press ENTER to finish.

Edit Access Code

8. Enter new access code (minimum of 4 digits, maximum of 7 digit).
9. Press ENTER.
10. Enter code again. Press ENTER.

Panel Functions

11. Press the up or down arrow key to move through the list of available functions.
12. Then press right arrow to move to Y (yes) or N (no) selection column.
13. Press the up or down arrow key to select Y or N.
14. Press ENTER.
15. Repeat steps 12 through 15 until user profile is complete.

6.2.6 Communicator Options

Communicator options provides the configuration for reporting events to a central station.

1. From the main menu.
2. Select 6 for Network Programming.
3. Press 6 to enter Communicator Options menu.

Communicator Assignments

Each panel in the network system specifies which network communicator is used for reporting. The network communicator capability of the linked system allows all panels to use the same communicator providing an economical solution for reducing the number of paths required for reporting purposes. A communicator is specified by panel number. The network communicators will be used to report events according to the communicator report table.

Communicator Miscellaneous

When using the SIA reporting format, the communicator sends information according to the SIA Reporting Type.

The selections for this option are:

1. pi modifier (default)
2. Panel ID*

NOTE: *Only SIA sends the panel ID when reporting.

Receiver Configuration

The network system can report events to as many as 68 receivers. See Appendix C for panel/receiver relationship numbers. Each receiver can be assigned reporting credentials. When using a format that supports phone numbers, it can be up to forty digits long.

1. From the main menu.
2. Select 6 for Network Programming.
3. Press 6 to enter Communicator Options menu.
4. Select 3 for Receiver Configuration.
5. Select Panel to Program and press ENTER.
6. Enter the receiver number that you want to report to. The receiver numbers available will correspond with what panel number you entered. Receiver numbers are populated based on panel number and audited to allow only the 4 appropriate receivers. See Appendix C for receiver number.

Available Format choices are:

Reporting Format
Contact ID
SIA500
SIA8
SIA20
Ethernet
Cellular
eVance
UNUSED

Communicator Reporting Table

The Communicator Report Table specifies event reporting for each panel on the network. Each row in the table specifies a panel, event types to report, primary and backup receiver numbers, and report by point or zone. Associated with the receivers are account number and daily test option. The table can have up to 99 rows.

1. From the main menu.
2. Select 6 for Network Programming.
3. Press 6 to enter Communicator Options menu.
4. Select 4 for Communicator Reporting Table.
5. Press * to add rows, Press ENTER to edit data

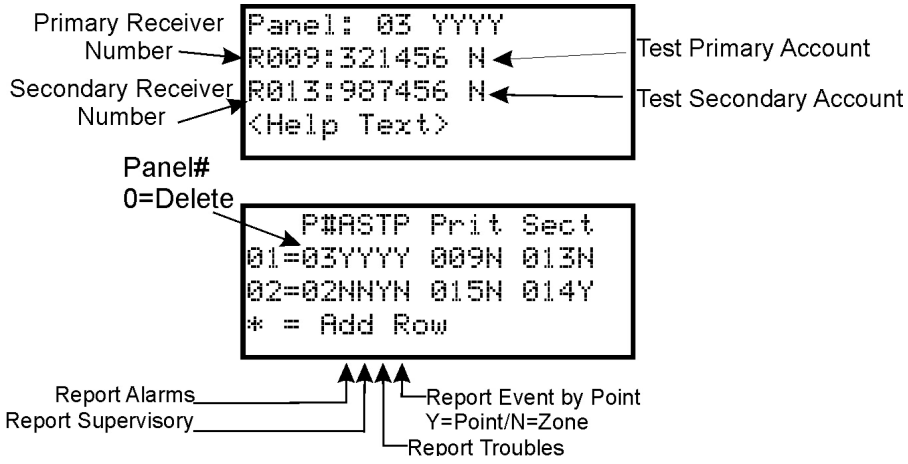

Figure 6.64 Communicator Reporting

6.3 Sync Network Options

If after making changes to network programming, the distribution of network options fail, the system will report a trouble of network options out of sync. Use this menu to redistribute changed options to the rest of the network. The user will be required to choose a panel to source the options from. Scroll down through the informational message and press ENTER to view the Select Source screen.

1. Enter the installer code. The panel will automatically go to the main menu.
2. Select 6 for Network Programming Menu.
3. Select 8 for Sync Network Options.

4. Select which panel to source the options from.

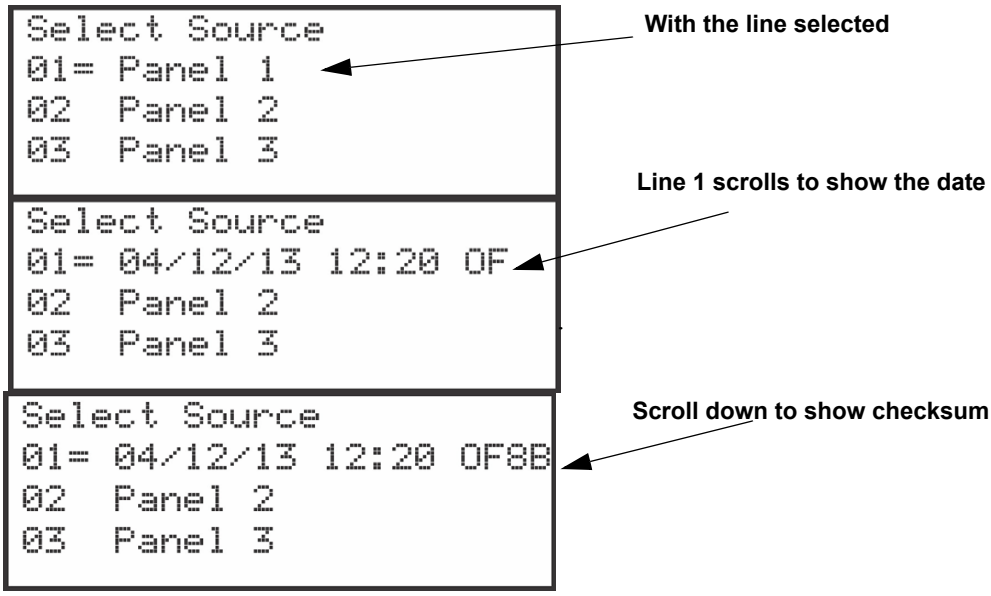

Figure 6.65 SYNC Network Options

6.4 Network Management Quick Reference

	Menu	Options/Defaults			Comments
Network Programing	Learn Network	Guest or member	Add or remove panels into the network		See Section 6.2.1
	Edit Network Names	Panel Names	Network Panel ID	Edit Panel Names	See Section 6.2.2
		Site Names	Edit Site Member	Edit Site Names	
	Edit Panel ID	Change current panel ID			See Appendix B for a list of available characters and their numeric designators. Section 6.2.3
	Computer Access	Computer Access Number	*123456		See Section 6.2.4
		Computer Code	*0		
	Access Codes	Select Profile (01 - 20)	Edit Name		Profile 1 is the profile that dictates what functions the Firefighter Key has access to. Because this is the profile for a keys, the user name and the access code can not be edited for this profile. Profile 2 is the profile for the installer and is referred to as the “Installer Code”. This profile’s user name and panel functions can not be edited. See Section 6.2.5.
			Edit Access Code		
			Panel Functions	System Reset	
				System Silence	
				System ACK	
				Fire Drill Key	
				System Tests	
				Fire Drill Menu	
				Indicator Test	
				Walk Test-No Report	
				Walk Test-With Report	
				Communicator Test	
				Clear History Buffer	
				Point Functions	
				Disable/Enable Buffer	
				Point Status	
				Set SLC Device Address	
				SLC Single Device Locator	
				SLC Multi-Device Locator	
				I/O Point Control	
				Event History	
				Set Time & Date	
				Network Diagnostics	

	Menu	Options/Defaults				Comments	
Network Programming (cont.)	Communicator Options	Select Profile (01 - 20)	Panel Functions	Network Programming		Profile 1 is the profile that dictates what functions the Firefighter Key has access to. Because this is the profile for a keys, the user name and the access code can not be edited for this profile. Profile 2 is the profile for the installer and is referred to as the “Installer Code”. This profile’s user name and panel functions can not be edited. See Section 6.2.5.	
				Panel Programming			
				System Information			
				Multi-Site			
				Upload/Download			
				F1 Function Key			
				F2 Function Key			
				F3 Function Key			
				F4 Function Key			
				Send/Receive Firmware Updates			
		Communicator Assignments	Select Panel	Primary		0= unused	See Section 6.2.6
		Communicator Miscellaneous	SIA Options	Enable pi SIA Modifier			See Section , "Communicator Miscellaneous"
				Include Panel ID in SIA Reporting			
		Receiver Configuration	Select Panel	Select Receiver	Receiver Number		See , "Receiver Configuration"
			Receiver Format	Contact ID			
				SIA500			
				SIA8			
				SIA20			
				eVance			
				Ethernet			
				Cellular			
				UNUSED			
			Receiver Credentials				
		Communicator Report Table		Panel		See , "Communicator Reporting Table"	
				Report Alarms			
				Report Supervisory			
				Report Troubles			
				Report Events by Point			
				Primary Receiver			
				Primary Account			
				Test Primary Account			
				Secondary Receiver			
				Secondary Account			
				Test Secondary Account			
	Sync Network Options					See Section 6.3	

Section 7: IDP, SK, SD and SWIFT™ SLC Device Installation

CAUTION: To avoid the risk of electrical shock and damage to the unit, power should be OFF at the control panel while installing or servicing.

7.1 List of IDP SLC Devices

The following IDP SLC devices can be used with the control panel. See the device installation instructions for more information (packaged with the device).

NOTE: The control panel supports the use of either IDP SLC,SK SLC, or SD SLC devices. You cannot install a mix of SLC device types on the control panel IDPSLC SLC devices can be used with IDP wireless devices.

SK Part Number	Model Name/Description	Install Sheet PN
IDP-PHOTO	Photoelectric smoke detector	I56-3611-00
IDP-PHOTO-T	Photoelectric smoke detector with thermal (135°F)	
IDP-PHOTOR	Photoelectric replacement smoke detector with remote test capability in DNR	I56-3569-00
IDP-ACCLIMATE	Multi criteria photoelectric smoke detector with thermal (135°F)	I56-3611-00
IDP-BEAM	Reflected beam smoke detector without test feature	I56-2735-00
IDP-BEAM-T	Reflected beam smoke detector with test feature	
DNR/DNRW	Duct smoke detector housing. Non-relay (PhotoR or Photo sold separate)	I56-3051-00
IDP-HEAT	Fixed temperature thermal detector (135°F)	I56-2722-00
IDP-HEAT-ROR	Rate-of-rise thermal detector with 135° fixed temperature	
IDP-HEAT-HT	Fixed high temperature thermal detector (190°F)	
IDP-PULL-SA	Addressable single action pull station	I56-2736-00
IDP-PULL-DA	Addressable dual action pull station	I56-3605-00
IDP-ISO	Fault isolator module	I56-2729-00
IDP-MONITOR	Monitor module	I56-3442-00
IDP-MINIMON	Mini monitor module	I56-3444-00
IDP-MONITOR-2	Dual input monitor module	I56-3435-00
IDP-MONITOR-10	10 input monitor module	I56-3443-00
IDP-RELAY	Addressable relay module	I56-3438-00
IDP-RELAY-6	Six relay control module	I56-3439-00
IDP-RELAYMON-2	Dual relay/monitor module	I56-3734-00
IDP-ZONE	Addressable zone interface module	I56-3440-00
IDP-ZONE-6	Six zone interface module	I56-3441-00
IDP-CONTROL	Supervised control module	I56-3436-00
IDP-CONTROL-6	Six circuit supervised control module	I56-3437-00
IDP-FIRE-CO	CO Smoke Detector	I56-3946-00
B210LP	6" mounting base	I56-0595-00
B224BI-WH / IV	6" isolator base. White or Ivory	I56-0725-00
B224RB-WH / IV	6" relay base. white or Ivory	I56-3737-00
B200SR-WH / IV	6" temporal sounder base. White or Ivory	I56-3392-00
B200S-WH / IV	Intelligent Sounder Base. White or Ivory	I56-3387-00
B501	4" mounting base	I56-0357-00
B501-WHITE / IV / BL	4" mounting base	I56-6527-00
B200SR-LF-WH/ IV	Low Frequency Sounder Base. white or Ivory	I56-4152-00
B200S-LF-WH / IV	Low Frequency Sounder Base. White or Ivory	I56-4151-00
IDP-PHOTO-W / IV	Photoelectric smoke detector. White or Ivory	I56-6531-00
IDP-PHOTO-R-W/ IV	Photoelectric replacement smoke detector with remote test capability in DNR. White or Ivory	I56-6532-00
IDP-PHOTO-T-W/ IV	Photoelectric smoke detector with thermal (135°F) White or Ivory	I56-6534-00
IDP-HEAT-W/ IV	Fixed temperature thermal detector (135°F). White or Ivory	I56-6533-00

Table 7.13 IDP SLC Devices

SK Part Number	Model Name/Description	Install Sheet PN
IDP-HEAT-ROR-W / IV	Rate-of-rise thermal detector with 135° fixed temperature. White or Ivory	I56-6533-00
IDP-HEAT-HT-W / IV	Fixed high temperature thermal detector (190°F). White or Ivory	I56-6533-00
Color Guide: -IV = Ivory color, -BL = Black, -WH = White, -WHITE-White		

Table 7.13 IDP SLC Devices

7.2 List of SK SLC Devices

The following SK SLC devices can be used with the control panel. See the device installation instructions (packaged with the device) for more information.

The control panel supports the use of either IDP SLC, SK SLC, or SD SLC devices. You cannot install a mix of SLC device types on the control panel. SK SLC devices can be used with SK wireless devices.

Part Numbers	Model Name/Description	Install Sheet PN
SK-PHOTO	Photoelectric smoke detector	I56-3426-001
SK-PHOTO-T	Photoelectric smoke detector with thermal (135°F)	
SK-PHOTOR	Photoelectric detector with remote test capability	
SK-ACCLIMATE	Multicriteria photoelectric smoke detector with thermal (135°F)	
SK-BEAM	Reflected beam smoke detector without test feature	I56-3433-001
SK-BEAM-T	Reflected beam smoke detector with test feature	
SK-DUCT	Photoelectric duct smoke detector with extended air speed range	I56-3432-000
SK-HEAT	Fixed temperature thermal detector (135°F)	I56-3429-000
SK-HEAT-ROR	Rate-of-rise thermal detector with 135° fixed temperature	
SK-HEAT-HT	Fixed high temperature thermal detector (190°F)	
SK-PULL-SA	Addressable single action pull station	I56-3446-000
SK-PULL-DA	Addressable dual action pull station	I56-3447-000
SK-ISO	Fault isolator module	I56-3445-000
SK-MONITOR	Monitor module	I56-3442-000
SK-MINIMON	Mini monitor module	I56-3444-000
SK-MONITOR-2	Dual input monitor module	I56-3435-000
SK-MON-10	10 input monitor module	I56-3443-000
SK-RELAY	Addressable relay module	I56-3438-000
SK-RELAY-6	Six relay control module	I56-3439-000
SK-RELAYMON-2	Dual relay/monitor module	I56-3735-000
SK-ZONE	Addressable zone interface module	I56-3440-000
SK-ZONE-6	Six zone interface module	I56-3441-000
SK-CONTROL	Supervised control module	I56-3436-000
SK-CONTROL-6	Six circuit supervised control module	I56-3437-000
SK-FIRE-CO	CO Smoke Detector	I56-3945-000
B200S-WH / IV	Intelligent Sounder Base	I56-3387-00
B200SR-WH / IV	Sounder base	I56-3392-00
B201LP	6" mounting base	I56-0595-00
B224BI-WH / IV	6" isolator base	I56-0725-00
B224RB-WH / IV	6" relay base	I56-3737-00
B200SR-LF-WH / IV	Low Frequency Sounder Base	I56-0357-00
B200S-LF-WH / IV	Low Frequency Sounder Base	I56-4152-00
B501	4" mounting base	I56-0357-00
B501-WHITE / IV / BL	4” Plug-in Detector Base	I56-3738-00
SK-PHOTO-W	Photoelectric smoke detector. White	I56-6527-00
SK-PHOTO-R-W	Photoelectric detector with remote test capability, for use with DNR duct smoke detector. White	I56-6528-00
SK-PHOTO-T-W	Photoelectric smoke detector with thermal (135°F) White	I56-6530-00
SK-HEAT-W	Fixed temperature thermal detector (135°F). White	I56-6529-00

Table 7.14 SK SLC Devices

Part Numbers	Model Name/Description	Install Sheet PN
SK-HEAT-ROR-W	Rate-of-rise thermal detector with 135° fixed temperature. White	I56-6529-00
SK-HEAT-HT-W	Fixed high temperature thermal detector (190°F). White	I56-6529-00
Color Guide: -IV = Ivory color, -BL = Black, -WH = White, -WHITE-White		

Table 7.14 SK SLC Devices

7.3 List of SD SLC Devices

The following SD SLC devices can be used with the control panel. See the appropriate section number in this manual or the device installation instructions (packaged with the device) for more information.

NOTE: The control panel supports the use of either SD SK, or IDP SLC devices. You cannot install both SLC device types on this control panel

Model Number	Model Name/Description	Install Sheet PN
SD505-PHOTO	Photoelectric smoke detector.	150955
SD505-HEAT	Absolute temperature heat detector. Trip point range from 135°F–150°F (0°C–37°C).	
SD505-6AB	6" base	
SD505-6IB	6" short circuit isolator base	I56-3541-00
SD505-6RB	6" relay base	I56-3542-00
SD505-6SB	6" sounder base	I56-3540-00
SD505-DUCT	Duct Smoke Detector. Duct Housing including the SD505- Analog Photoelectric Smoke Sensor. Intake tubing for duct available in three lengths: SD505-T2 (2.5 foot); SD505-T5 (5 foot); SD505-T10 (10 foot)	1700-09882
SD505-DUCTR	Duct Detector housing with relay base. Duct housing with relay base including SD505- Analog Photoelectric Smoke detector pre-installed	1700-09882
SD500-PS/-PSDA	Single or dual action addressable pull station	I56-3632-00
SD500-AIM	Addressable input module (switch input), standard size, DIP switch configurable	I56-3547-00
SD500-MIM	Mini input monitor module (switch input), small size, DIP switch configurable.	
SD500-ANM	Addressable notification module	I56-3544-00
SD500-ARM	Addressable relay module DIP switch configurable.	I56-3545-00
SD500-SDM	Addressable smoke detector module.	I56-3546-00
SD500-LIM	Line isolator module. Fits in a double gang box.	I56-3543-00
SD505-DTS-K	Remote test switch & LED indicator for the SD505-DUCTR	1700-09882

Table 7.15 SD SLC Devices

7.4 SWIFT® Wireless SLC Devices

The WIDP-WGI Wireless Gateway acts as a bridge between a group of wireless fire devices and a SLC loop on the IFP-75. It is powered by the SLC loop or by a regulated, external 24VDC UL-listed power supply. Available wireless devices include a photo detector, a photo/heat detector, a fixed-temperature heat detector, a rate-of-rise detector, and a monitor module. For updated details about wireless devices, system setup and operation see the SWIFT® Smart Wireless Integrated Fire Technology Manual # LS10036-001FH-E or LS10036-000SK-E for more information.

7.5 Maximum Number of Devices

The IFP-75 supports IDP, SK, SD, or SWIFT devices on one IFP-75 system. The maximum number of devices per system varies depending on device protocol Device support is as follows:

- IDP/SK Devices–An IFP-75 system can support a total of 75 IDP/SK detectors *and* 75 IDP/SK modules. For a maximum of 150 points.
- or
- SD Devices–An IFP-75 system can support a total of 75 SD SLC detectors and modules, in any combination.
- or
- IDP/SK SWIFT Wireless Devices–A SWIFT Gateway system supports up to 50 devices: 1 SWIFT Gateway and up to 49 (in any combination) wireless detectors and monitor modules. Multiple Gateways can be used. See the SWIFT manual P/N LS10036-000FH-E or LS10036-000SK-E for more information.

7.6 Wiring Requirements for SLC Devices

The following information applies to SLC devices. Refer to the section that describes the type of device you are installing for details.

7.6.1 Wire Sizing for Internal SLC

The SLC requires use of a specific wire type, depending on mode of operation, to ensure proper circuit functioning. Wire size should be no smaller than 18 AWG and no larger that 12 AWG wire. The wire size depends on the length of the SLC circuit. It is recommended that all wiring be twisted-pair to minimize the effects of electrical interference

7.6.2 Wiring Requirements for IDP or SK Modules

The IFP-75 SLC can be programmed to operate in IDP/SK mode. Use Table 7.16 to determine the specific wiring requirements for the SLC.

Wire Requirements	Distance in Feet (meters)	Wire Type
RECOMMENDED: Twisted-unshielded pair, 12 to 18 AWG (3.31mm2 to 0.82 mm2). 50 ohms, maximum per length of Style 6 & 7. 50 ohms per branch maximum for Style 4 loop.	12,500 ft. (3,810 m) 9,500 ft. (2895.6 m) 6,000 ft. (1,828.8 m) 3,700 ft. (1,127.76 m)	12AWG (3.31mm^2) 14AWG (2.08mm^2) 16AWG (1.31mm^2) 18AWG (.082mm)^2
Untwisted, unshielded wire, in conduit or outside of conduit.	5,000 ft. (1,528 m) 3,700 ft. (,127.76 m)	12 to 16 AWG (3.31^2 mm to 1.31 mm^2) 18 AWG (0.82 mm)
Twisted, shielded pair Note: • Shields must be isolated from ground • Shields should be broken at each device	5,000 ft. (1524 m) 3,700 ft. (1,127.76 m)	12 to 16 AWG (3.31 mm^2 to 1.31 mm^2) 18 AWG (0.82 mm^2)
Maximum total capacitance of all SLC wiring (both between conductors and from any conductor to ground) should not exceed 0.5 micro farads		

Table 7.16 SLC Wiring Requirements for IDP or SK module

.Figure 7.66 and Figure 7.67 show how wire length is determined for out & back tap and T-Tap.

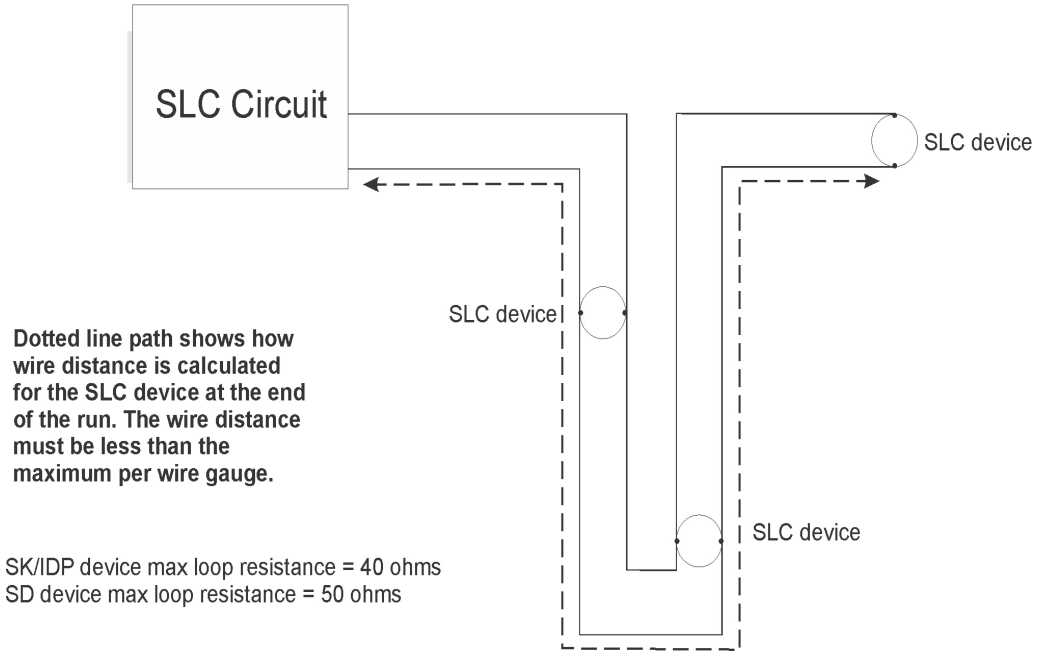

Figure 7.66 Calculating wire run length for a simple out and back

When using T-taps, the total length of all taps and the main bus must be met in addition to the maximum distance requirements for the various wire gauges.

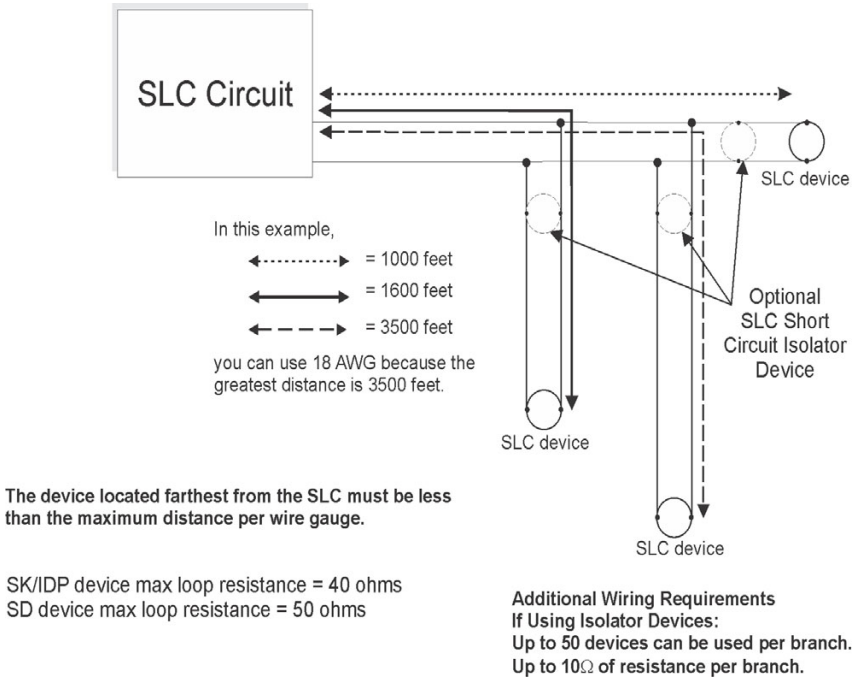

Figure 7.67 Calculating Wire Run Length for a T-tap

7.6.3 Wiring SLC in Class A Configuration

Figure 7.68 illustrates how to wire the SLC loop for Class A installations.

NOTE: Style 6 does not use short circuit isolator devices.

NOTE: Style 7 requires an isolator module as the first device on the in and the out loop

NOTE: No t-taps allowed on class A SLC loops

.

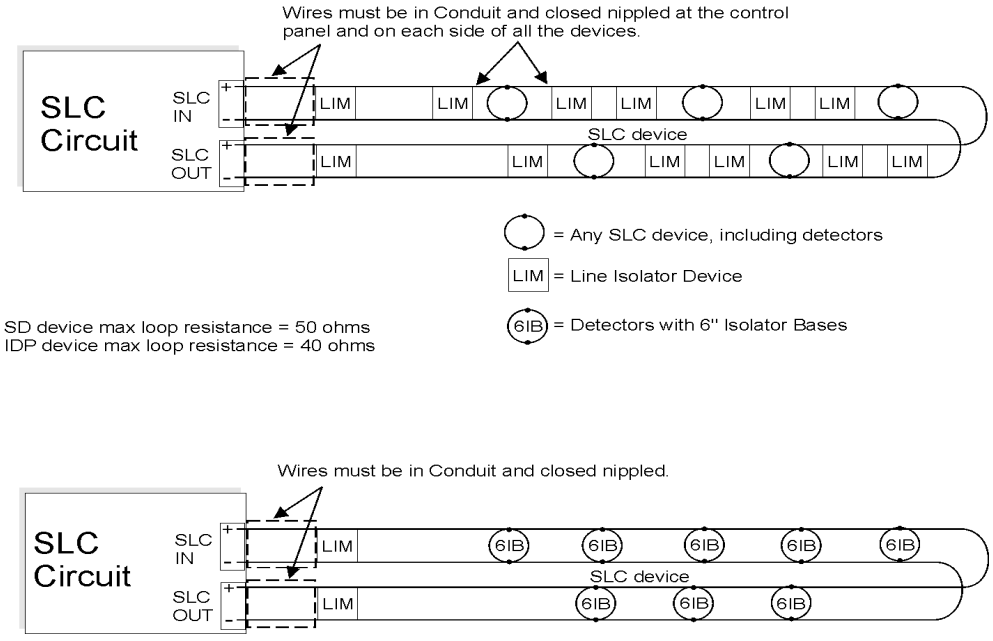

Figure 7.68 Class A SLC Configuration

7.7 Addressing IDP/SK SLC Devices

All IDP/SK devices are addressed using the two rotary dials that appear on the device board. Use the *ONES* rotary dial to set the ones place in a one or two digit number, and use the *TENS* rotary dial to set the tens place in a two digit number.

IDP/SK device addresses are handled differently than SD device addresses. The control panel recognizes when an IDP/SK detector or IDP/SK module is installed. For this reason, IDP/SK detectors can be assigned any unique address from 1 to 75, and IDP/SK modules can be assigned any unique address from 1 to 75. There can be an IDP/SK detector using address 1 and an IDP/SK module using address 1. 0 is an invalid address.

NOTE: Any device addressed over 50 will not be recognized by the pane

Example 1: To select device address 1, turn the *ONES* rotary dial to **1** and the *TENS* rotary dial to **0** as shown in Figure 7.69.

Example 2: To select device address 42, turn the ONES rotary dial to **2** and the TENS rotary dial to **4** as show in Figure 7.69.

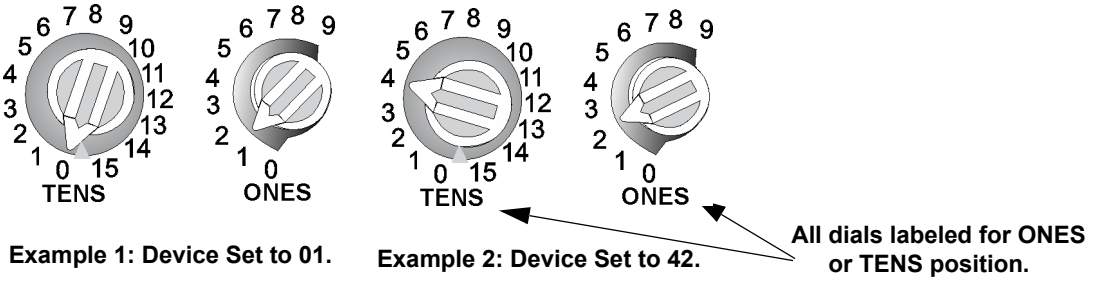

Figure 7.69 IDP/SK SLC Device Addressing Using Rotary Dials

7.8 SD Detector Installation

The information in this section applies to the following SD models, see Table 7.15 for list of devices.

1. Wire device bases as shown in Figure 7.70.
2. Set the address for each device as described in Section Figure 7.9.

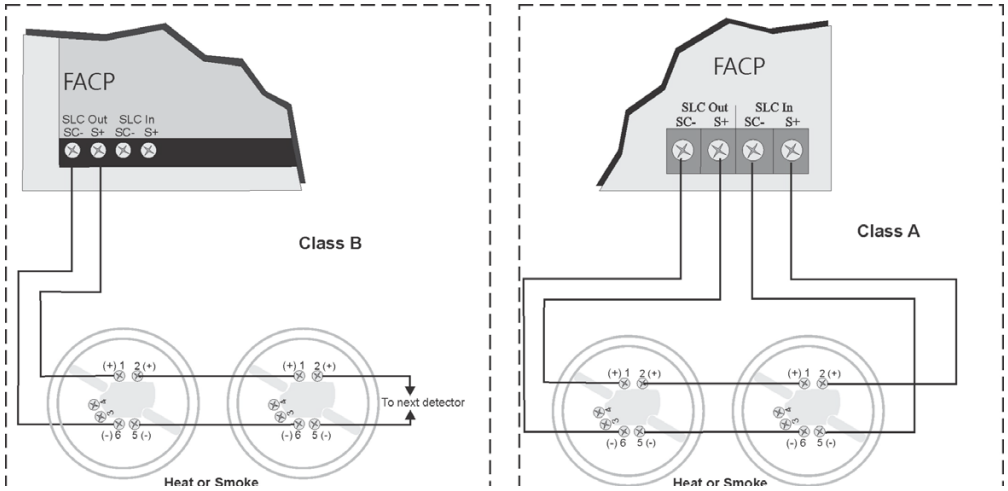

Figure 7.70 Heat or Smoke Detector Connection to the FACP (Class B)

7.9 Addressing SD SLC Devices

This section tells how to address detectors and modules. See Table 7.15 for a list of detectors that are easily addressed at the FACP. The Installer Code is required to perform this task.

To address:

1. Connect a detector base temporarily to the programming terminals as shown in Figure 7.71. (You can use the same base for each detector.)

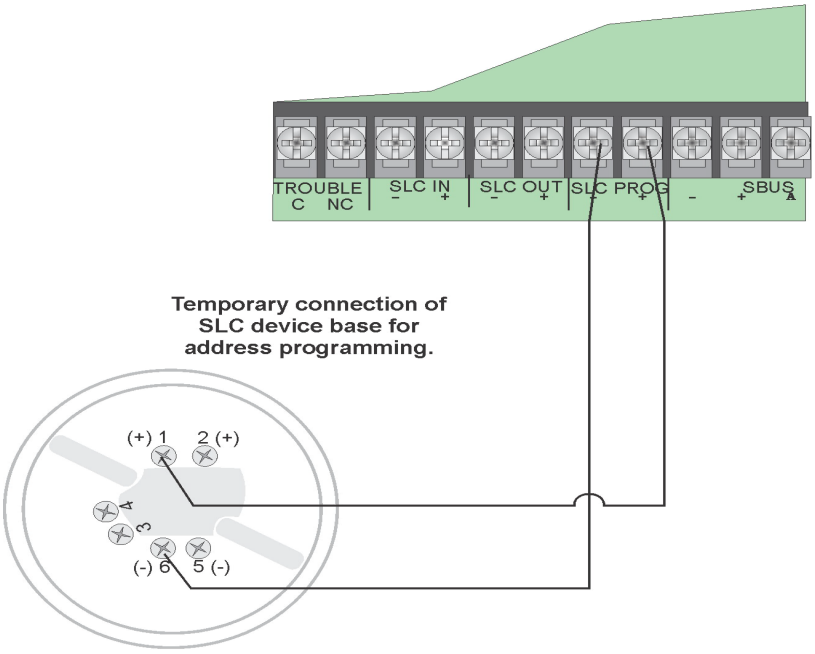

Figure 7.71 Temporary Connection of Detector Base to Panel for Addressing

2. Enter the Installer code, then press ENTER.
3. Select 2 for Point Functions.
4. Select 3 for Set SLC Dev Addr.
5. Select "Yes" by pressing the up arrow, then press ENTER. (The panel will go into trouble at this point. You can use the SILENCE key to stop the PZT. The trouble will clear automatically when the panel reinitializes when you finish programming.)
6. When the wait message clears, the following options display:

   1- for Read Address. Use to read (or check) a single detector's address.

   2- for Write Address. Use to program a single detector's address.

   3- for Seq. Programming. Use to program more than one detector in sequential order.
7. If you are changing addresses, write the programmed address on the back of the device.
8. To exit press left arrow until fully exited.

7.9.1 SLC Devices with DIP Switches

Input and relay module addresses are set using the DIP switches on the module board. The chart below shows the available addresses. For example, to select address 3, place DIP switches 1 and 2 in the up position. The range of valid addresses is 1-50. 0 is an invalid address.

NOTE: Any device addressed over 50 will not be recognized by the panel.

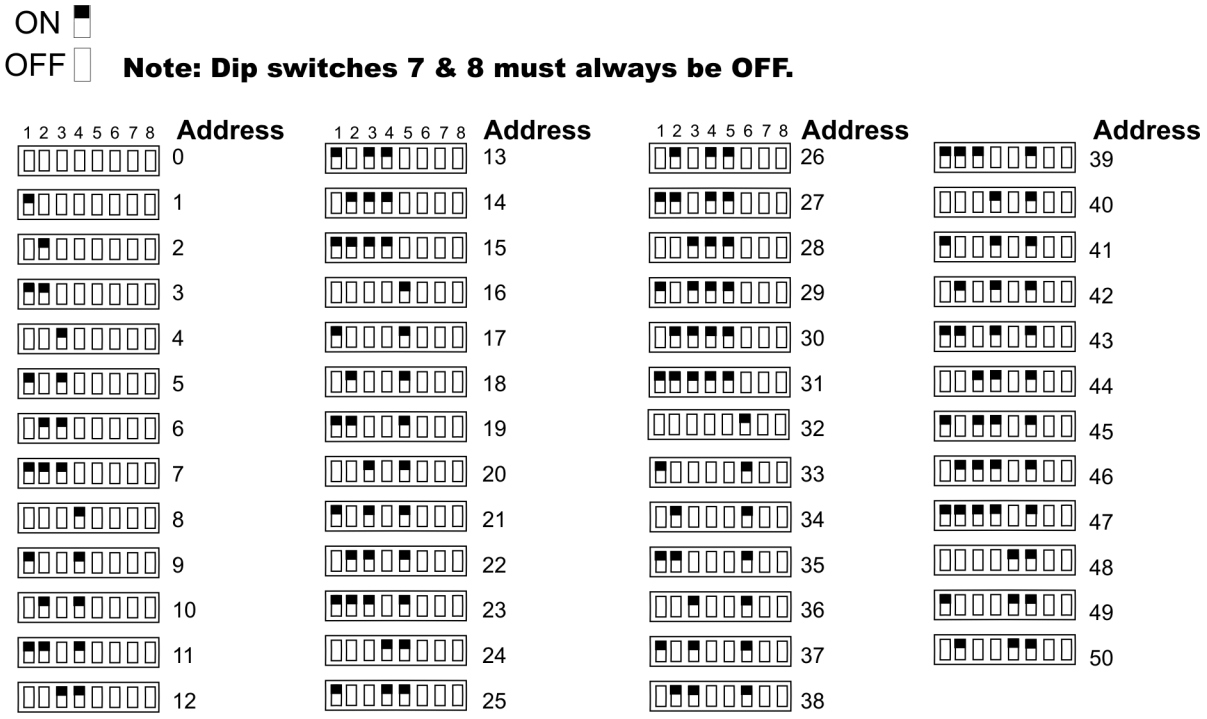

Figure 7.72 SLC Device Addressing Using DIP Switches

7.10 Wiring the WIDP-WGI or SK-WGI.

NOTE: The WIDP-WGI or SK-WGI, as part of the wireless network, has been tested for compliance with the Federal Communications Commission (FCC) requirements of the United States Government. It has not been evaluated for use outside the USA. Use of this system outside the USA is subject to local laws and rules to which this product may not conform. It is the sole responsibility of the user to determine if this product may be legally used outside the USA.

NOTE: It is recommended to use the same wire gauge is there are multiple connections to the same terminal.

For more information regarding Gateway wiring instructions, see SWIFT manual LS10036-000FH-E or LS10036-000SK-E.

7.10.1 SLC Connections

The WIDP-WGI or SK-WGI Wireless Gateway acts as a bridge between a group of wireless fire devices and a SLC loop on the IFP-75. It is powered by the SLC loops or by a regulated, external 24 VDC UL listed power supply. For details about wireless devices, system setup, and operation, see the *SWIFT™ Smart Wireless Integrated Fire Technology Instruction Manual P/N* LS10036-000FH-E or *LS10036-000SK-E*.

Section 8: Programming Overview

This section of the manual is intended to give you an overview of the programming process. Please read this section of the manual carefully, especially if you are programming the control panel for the first time.

The JumpStart® Autoprogramming feature automates many programming tasks and selects default options for the system. You will run JumpStart Autoprogramming at least once when you are installing the system. See Section 8.1 for details. After you run JumpStart Autoprogramming, you may need to do some additional programming depending on your installation. Section 9 of this manual covers manual programmable options in detail.

Programming the panel can be thought of as a three part process. You must program:

- System options. These are options that affect general operation of the panel (see Section 9.6 for details).
- Options for input points and zones. These are primarily options that control detection behavior of devices (see Section 9.3 and Section 9.5 for details).
- Options for output points and groups. This includes selecting characteristics for output groups and mapping output circuits to output groups (see Section 9.4 and Section 9.5 for details).

8.1JumpStart® AutoProgramming

The JumpStart Autoprogramming feature allows for faster system setup. When you run JumpStart Autoprogramming (immediately after addressing SLC devices), the system scans devices on all SLC loops and determines device type (for example, photoelectric smoke detector or heat sensor) and selects some system options based on the device type. This saves the installer from having to program options for each device. Depending on the application, the installer may need to make some changes after JumpStart® Autoprogramming completes.

See Section 8.1.3 for complete details about running JumpStart Autoprogramming.

WARNING:

JUMPSTART AUTOPROGRAMMING IS INTENDED TO BE RUN ONE TIME ONLY, IMMEDIATELY AFTER SLC DEVICES HAVE BEEN ADDRESSED AND CONNECTED. JUMPSTART AUTOPROGRAMMING WILL RESET ALL MANUALLY PROGRAMMED OPTIONS TO DEFAULT SETTINGS. DO NOT RUN JUMPSTART AFTER YOU HAVE CONFIGURED THE SYSTEM.

8.1.1 Input Points

JumpStart Autoprogramming will determine the number and type of input points (detectors or contact monitor modules) on each SLC loop. JumpStart Autoprogramming assigns the correct detector type (heat, or photoelectric), so the installer does not need to edit device type for detectors. Any contact monitor modules on the system will be assigned type "Manual Pull." The installer will need to manually change the switch type if manual pull is not correct.

JumpStart Autoprogramming creates one zone (Zone 1) and assigns all input points to Zone 1. Zone 1 is mapped to Output Group 1.

8.1.2 Output Points

JumpStart Autoprogramming creates three output groups and assigns output circuits as follows:

Circuits 1-2:
Configured as Notification and assigned to Group 1. JumpStart Autoprogramming automatically programs Zone 1 to activate Group 1 using constant on output when an alarm condition occurs.

Circuit 3 (Relay 1):
Assigned to Group 124. JumpStart Autoprogramming automatically programs Zone 1 to activate Group 124 using constant on output when a supervisory condition occurs.

Circuit 4 (Relay 2):
Assigned to Group 125. JumpStart Autoprogramming automatically programs Zone 1 to activate Group 125 using constant on output when an alarm occurs.

Addressable output points (Relay modules):
All addressable relay devices will be configured as "Output Pt" (general purpose output point) and assigned to Group 1.

NOTE: Relay output is constant even if the zone activating the relay is programmed with an output pattern

8.1.3 Running JumpStart AutoProgramming

Run JumpStart Autoprogramming immediately after addressing and connecting all input devices (detectors, pull stations, and so on) and output devices (notification appliances, relays, and so on).

NOTE: To install a few devices manually after running JumpStart, see Section 9

To run JumpStart Autoprogramming:

1. Press ENTER to view the Main Menu.
2. Select 7 for Program Menu.
3. From the next menu, select 6 for JumpStart.

4. When the message, “SLC FAMILY” message appears, select IDP, SK Series, or SD; depending on the type of SLC devices the panel is using, and press ENTER to accept.
5. A series of messages displays for the next several seconds. JumpStart® scans the SLC loops for devices. This can take several minutes, depending on the number of devices attached.
6. When the message “Configuring System Done” displays, press any key to continue.
7. Select one of the following options from the menu that displays.

1 - Review System	Press 1 if you need to review the JumpStart configuration.
2 - Repeat JumpStart	Press 2 if you need to rerun JumpStart for any reason.
3 - Accept Changes	1. If you are ready to make the JumpStart® configuration permanent, select 3. 2. The system will ask you if the installation contains any Addressable Duct Detectors Used. If there are none, select 2 for No and skip to Step 8. If the system contains duct detectors, select 1 for Yes and continue with Step 3. 3. From the list that displays, select the SLC that contains the duct detectors. 4. The first photoelectric or ionization detector on the system will display. Select 1 for DUCT and 2 for NonDUCT. 5. Press up arrow to select the next detector. Select 1 for DUCT and 2 for NonDUCT. Continue until all duct detectors have been selected. (Note: You can move backwards through the list with down arrow). 6. When you reach the last detector on this device, press left arrow. 7. The system will ask you if there are any duct detectors used. If there are, select 1 for Yes and the message will ask, Have All Addressable Duct Detectors Been Identified? Left arrow for “No”, Right arrow for “Yes”. If there are no more duct detectors, continue with Step 8. 8. The system will restart with the saved JumpStart configuration. 9. After the system resets, it will use the new JumpStart configuration.
4 - Discard Changes	If you want to discard the changes, and keep the configuration you had before running this JumpStart press 4.

8.2 Mapping Overview

This section of the manual is an overview of mapping.

Mapping is an important concept with the control panel. In general terms, mapping is assigning or linking events to outputs that should activate when events occur. You do this by assigning input points to input zones, output points to output groups and then linking or mapping zones and output groups.

Figure 8.73 is a brief overview of the concept of mapping. The next several pages of the manual show these subjects in detail.

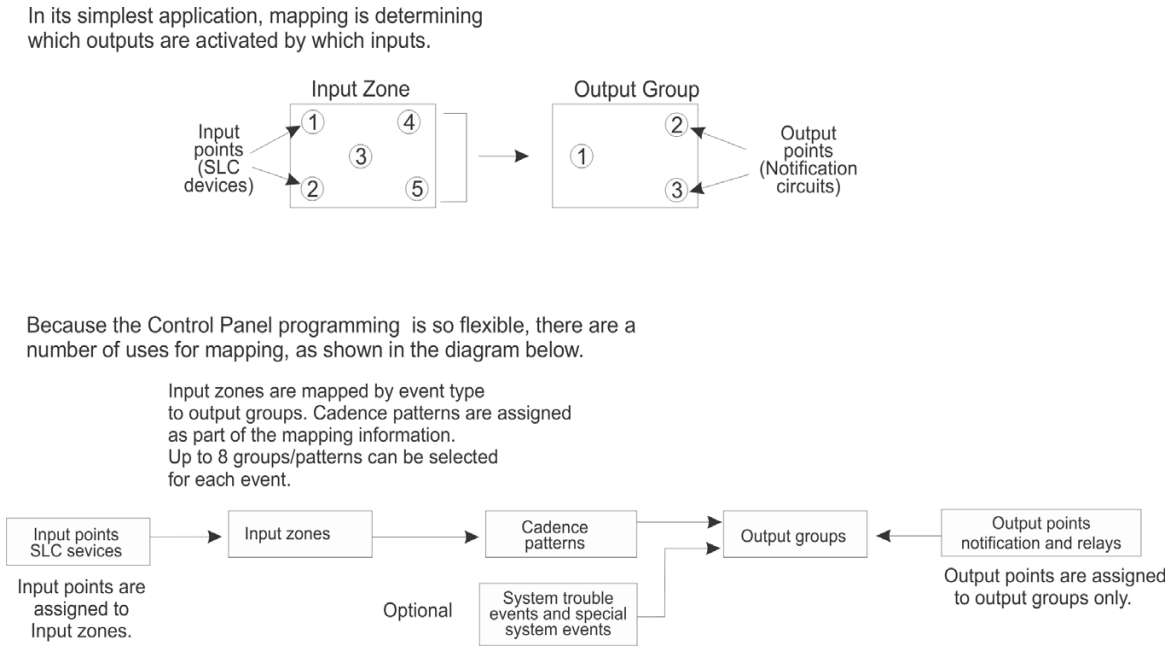

Figure 8.73 Mapping Overview

NOTE: Mapping cannot be programmed through annunciators and can only be programmed through HFSS Honeywell Fire Software Suite.

8.2.1 Input Point Mapping

Input points are assigned to input zones. Any input point can be assigned to any input zone. (Input points can be assigned to one zone only. An input point can be designated as “Unused,” which means it has not been assigned to a zone).

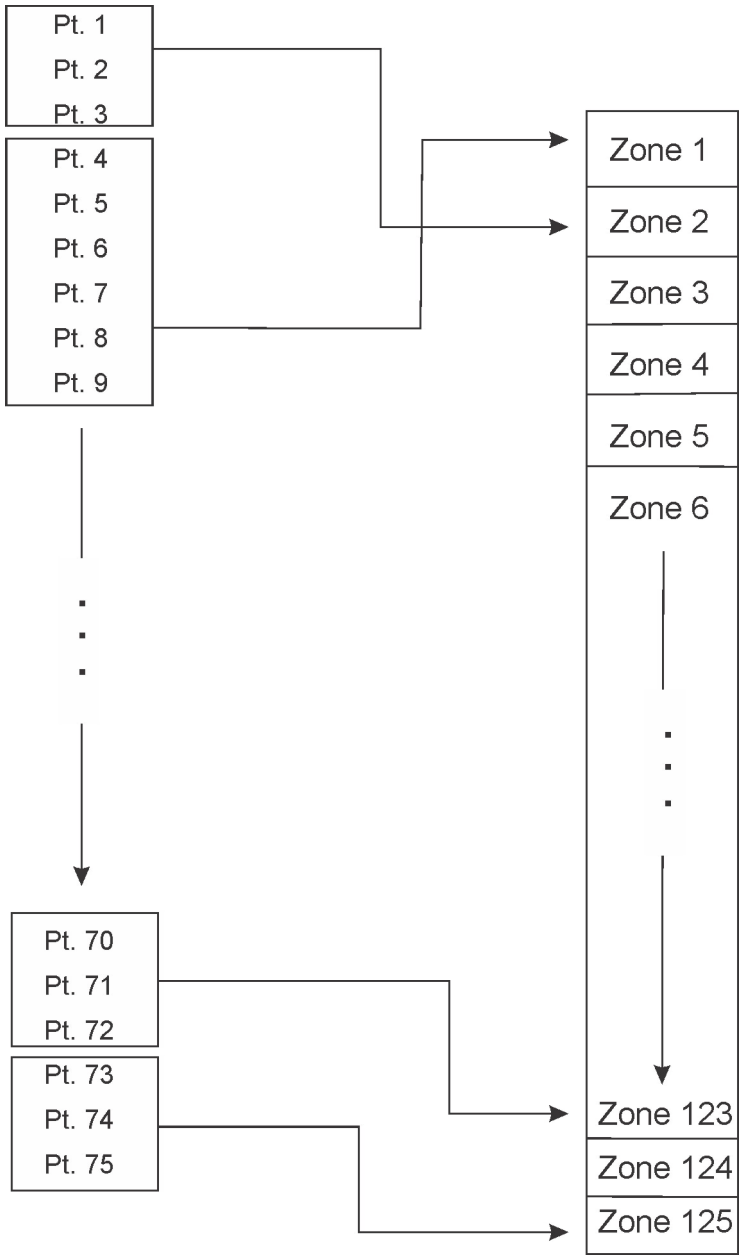

Figure 8.74 Input Point Assignment Example

8.2.2 Output Circuit Mapping

Figure 8.75 is a simple example showing how to assign notification and relay output circuits to groups. For an example of a simple floor above/floor below application, see Figure 8.77.

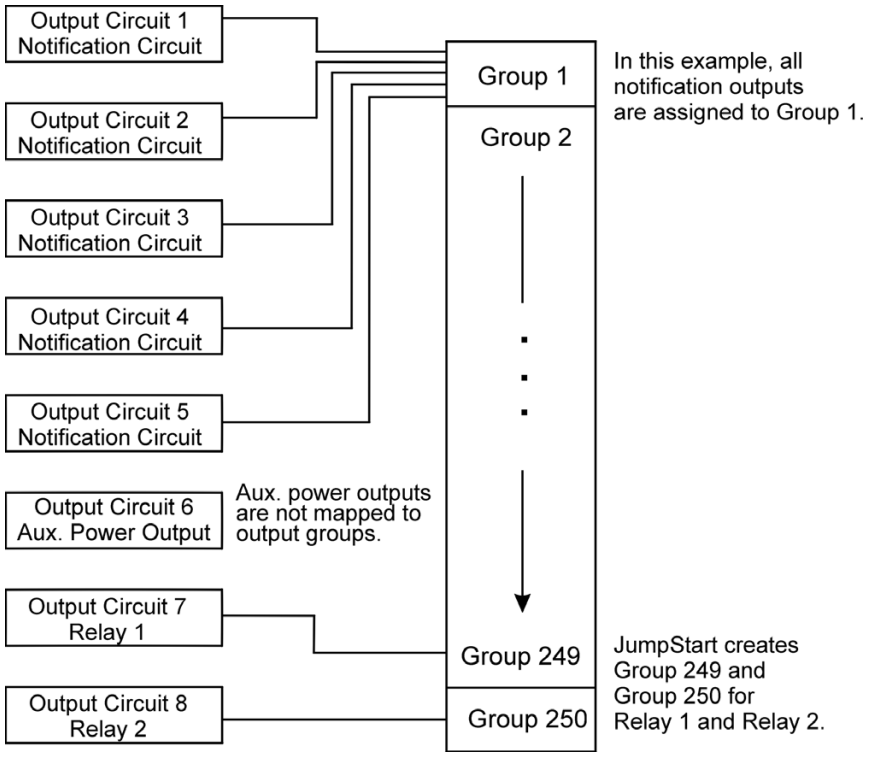

Figure 8.75 Assigning Output Circuits to Groups (Example)

8.2.3 Event Mapping

There are 11 types of Zone events, 14 types of Panel events, and 6 types of Site events that can be mapped (see Table 8.17). For each event type, you can activate the output groups with specific output patterns. Mapping examples are shown in Figure 8.76, Figure 8.77, & Figure 8.78.

System	Zone	Panel	Site
Fire	Manual Pull Alarm	System Aux 1 Alarm	Fire Drill
	Water Flow Alarm	System Aux 2 Alarm	General Fire Alarm
	Detector Alarm (heat or smoke detectors)		General Fire Supervisory
	Zone Aux 1 Alarm		General Fire Pre-Alarm
	Zone Aux 2 Alarm		
	Interlock Alert		
	Interlock Release		
	Pre-Alarm		
	Fire Supervisory		
	Status Point		
	CO Alarm		
	CO Supervisory		
Emergency			
Advisory	Trouble	SBUS Expander Trouble	General Trouble
	Status Point Active	SBUS Class A Trouble	Site Silenced
		SLC Loop Trouble	
		AC Loss Trouble	F1 Key Active
		Battery Trouble	F2 Key Active
		Ground Fault Trouble	F3 Key Active
		Phone Line Trouble	F4 Key Active
		Reporting Account Trouble	

Table 8.17 Event Types

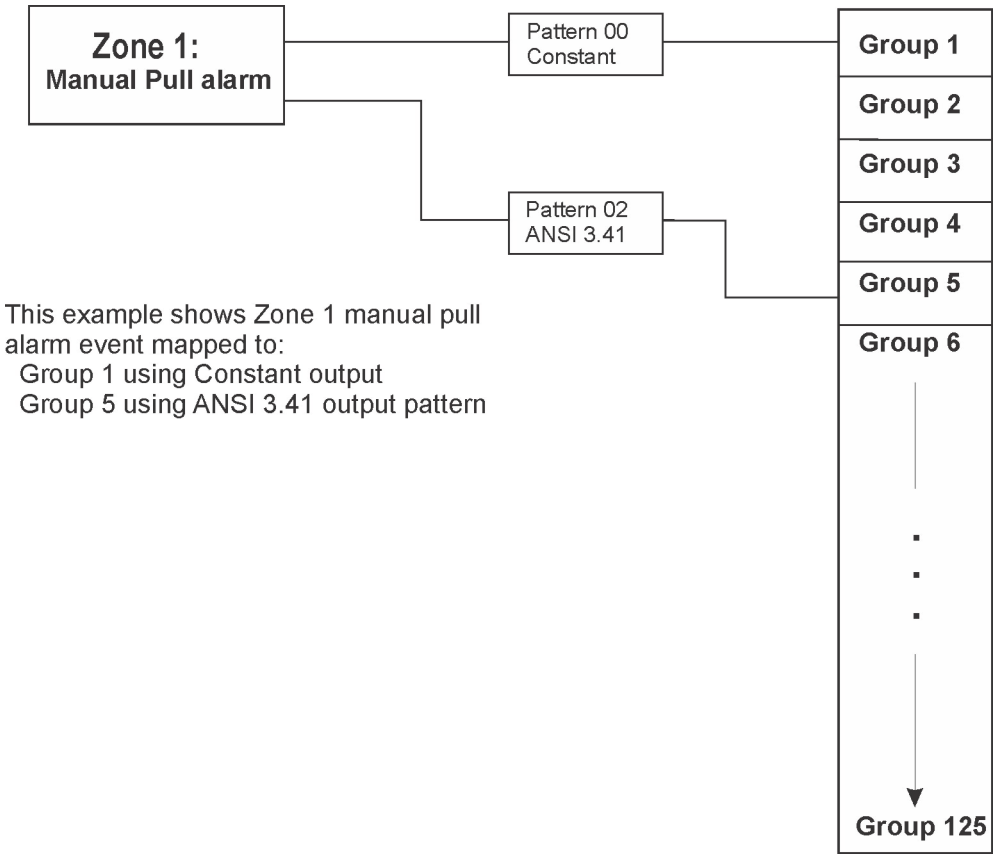

Figure 8.76 Example of Zone Events Mapped to Output Groups and Patterns

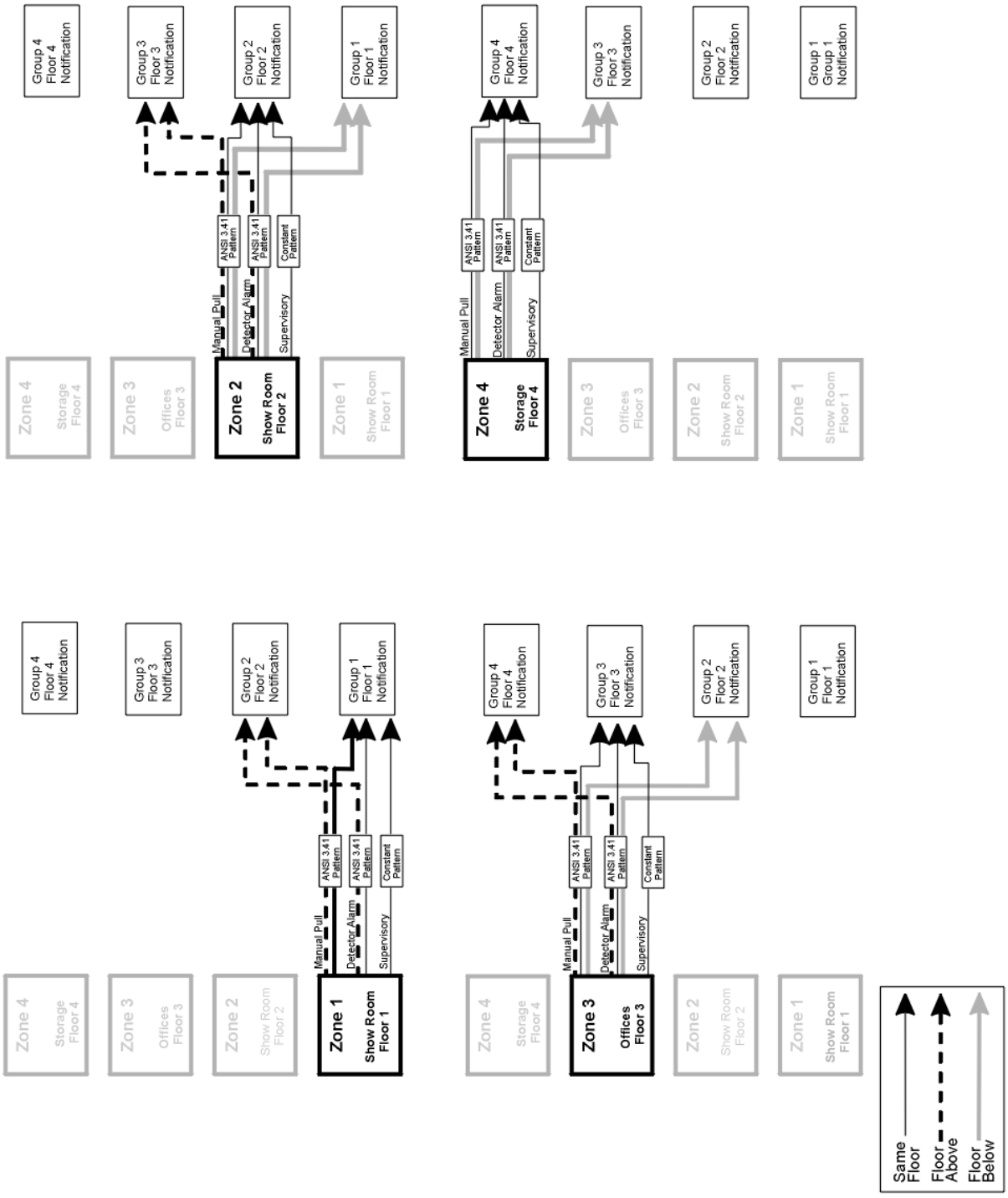

Figure 8.77 Example of Zone Events Mapped to Output Groups and Patterns

8.2.4 Mapping LED Points

Figure 8.78 is a simple example showing how LED points are mapped to zones and output groups. Typically you would create two output groups for each zone, one for alarms and one for troubles. (LED points are available when Models 5865-3/4 and/or 5880 are used with the system).

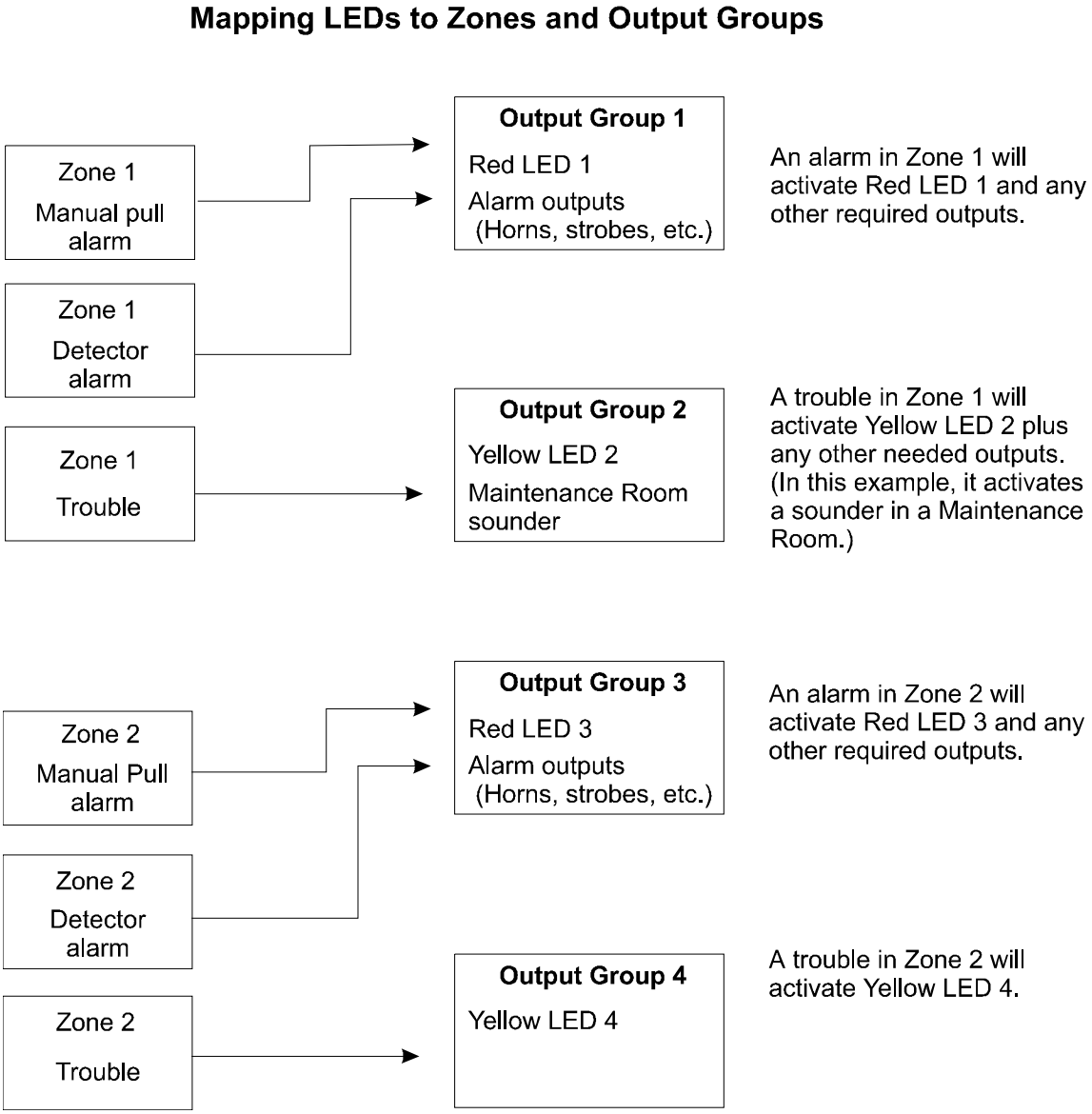

Figure 8.78 Example of LED Points Mapped to Output Groups (applies to Models 5865-3/4 and 5880)

8.3 Programming Using the HFSS Software Suite

You can use the HFSS Honeywell Fire Software Suite to program the control panel onsite (personnel will need to be onsite during the upload or download process). HFSS is a software package that lets you easily program the control panel using a Windows-based computer. HFSS is needed for Mapping. When using HFSS, you can set up the programming options for the panel, save the options in a file, then download the file to the panel. You can connect to the control panel directly using the onboard USB or Ethernet. Updates are available at www.farenhyt.com.

8.4 Programming Using an Annunciator

You can program the control panel from a system annunciator, using either the control panel's on-board annunciator, RA-100, RA-2000, or RA-1000 remote annunciators.

The following subsections describe programming basics, including a description of editing keys available for programming and how to move through programming menus. Section 9 contains specific information about individual programming options.

NOTE: Mapping cannot be programmed through the on-board and remote annunciators. Mapping is only available through HFSS Honeywell Fire Software Suite up/downloading software.

8.4.1 Entering / Exiting the Program Menu

■ To enter the Program Mode:

1. Enter the installer code if requested.
2. Select 7 for Program Menu.The menus described in Section 9 of this manual will display. Section 8.5 of this manual is a quick reference listing all programmable options and JumpStart Autoprogramming defaults.

■ To Exit Program Mode:

When you have completed working with the menus, press Left Arrow button several times until you are exited from programming mode. Two prompts will display. The first prompt is to make sure you intended to leave the Program Menu (select Yes or No as appropriate). The second prompt is for accepting all changes. If you select No, any changes you have made since you entered the Program Menu will have no effect.

8.4.2 Moving through the Menus

Figure 8.79 shows how to move through Menu screens, using the System Tests screen as an example.

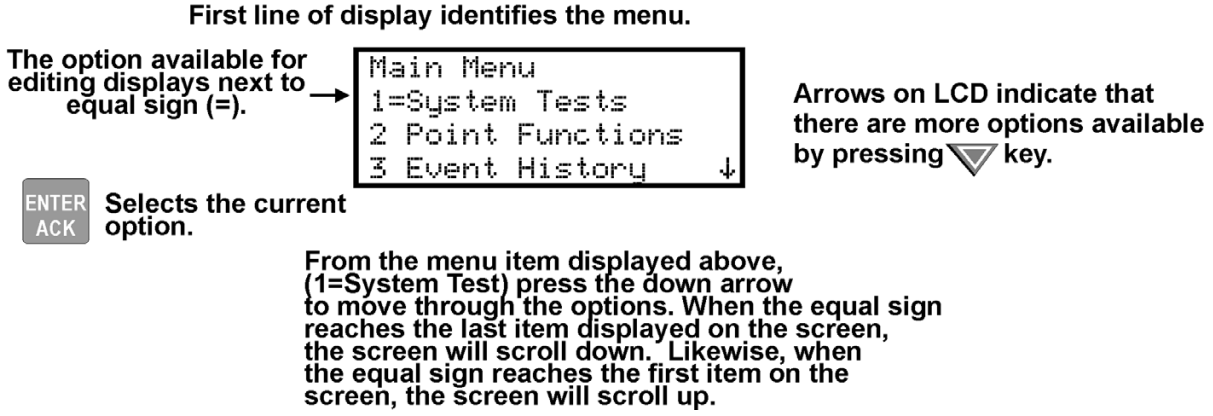

Figure 8.79 Moving through Program Menu

8.4.3 Selecting Options and Entering Data

There are several ways to make programming selections using the control panel depending on which screen you are currently using. The chart below is a generic explanation.

To	Press
Select from a menu.	Enter the number of the option.
Enter numeric data.	Press the appropriate number on the annunciator.
Enter text (alphanumeric data).	Enter each character individually by using up and down arrow keys until the one you wish to select displays. Then press the right arrow to select the character.
Select from a scrolling list.	Use the up and down arrow to move through a list of available options. When the option you want to select is displayed, press ENTER.

8.5 Programming Menu Quick Reference

This section of the manual lists all Program Menu options in the order they appear on the sub-menus. Default settings are indicated in text or marked with an asterisk. The comments column provide quick information and a reference to a section (if applicable) which has more detailed information.

Menu		Options/Defaults					Comments
Module	Edit Module	Select Module	Edit Module ID				Section 9.2.1
			Enter Module Name				
			Edit Module specific options				
	Add Module	5824 Serial/Parallel/ IO					Section Section 9.2.2
		RA-2000 LCD Annunciator					
		RA-1000 LCD Annunciator					
		RA-100 LCD Annunciator					
		RPS-1000 Power Supply					
		5496 NAC Expander					
		5880-LED / IO Module					
		5865-LED Annun Module					
		SK-NIC Network Interface Card					
	Delete Module	Select Module					Section 9.2.3
	View Module List	Select Module					Section 9.2.4
Zone	Edit Zone	Select Zone	Edit Zone Name				Section 9.3.1
			Zone Properties	Verification Type	*1-Count		
					2-Count		
					Alarm Ver.		
					PAS		
					SNGL ILOCK		
					DBL ILOCK		
				Heat Temp Set	135° to 150°F		
					135° to 190°F		
				Smoke Sensitivity	Low		
					Medium		
					High		
	Edit Zone	Select Zone	Zone Accessory Opt	Single/Multi-station Cadence	00-23		
				CO Single/Multi station Cadence	00-23		
				Local Zone	Yes		
					No		
	View Zone Points	Select Zone to View					Section 9.3.2

Menu		Options/Defaults					Comments
Group	Edit Group	Select Group		Group Name			Section 9.4.1
				Group Properties	Template Override	Y or N	
					Dynamic Act/Template Override Cadence	00-23	
	View Group Points	Select Group					
	Edit OPG Template	Select template	Modify name and which OPG's are in template				
Point	SK, IDP or SD Devices on Internal SLC	Enter Pt	Select Module [2,3]	UNUSED			Section 9.5.1
				SWITCH [1,2,3]	MANUAL PULL		
					WATER FLOW	*LATCH	
						NON-LATCH	
					FIRE SUPERVSY	*LATCH	
						NON-LATCH	
					FIRE DRILL		
					SILENCE		
					RESET		
					P.A.S. ACK		
					ZONE AUX1	*LATCH	
						NON-LATCH	
					ZONE AUX2	LATCH	
						NON-LATCH	
					SYSTEM AUX1	LATCH	
						NON-LATCH	
					SYSTEM AUX2	LATCH	
						NON-LATCH	
					DETECTOR		
					FIRE TAMPER	LATCH	
						NON-LATCH	
					MANUAL RELEASE		
					INTERLOCK		

Menu		Options/Defaults					Comments
Point (cont.)	SK, IDP or SD Devices on Internal SLC	Enter Point	Select Module [2,3]	SWITCH [1,2,3]	STATUS POINT		Section 9.5.1
					CO DETECTOR SWITCH		
					CO SUPERVISORY DETECTOR SWITCH	LATCH	
						NON-LATCH	
				NOTIF[1,2,3]	OUTPUT PT	Select Group	
					AUX CONST[1]		
					AUX RESET		
					AUX DOOR		
				RELAY[1,2,3]	OUTPUT PT	Select Group	
					AUX RESET		
					AUX DOOR		
				DETECTOR	2-WIRE SMOKE	Select Zone	
				W-Gateway [2,3]			
				W-SWITCH [2,3,4]	Same as SWITCH		
				W-RELAY [2,3,4]	Same as Relay		
			Select Sensor[2,3]	UNUSED			
				DETECTOR	PHOTO	No Accessory	
						SDR BAS	
						RLY BAS	
						I-SdrBa (Intelligent Sounder Base)	
					ION	No Accessory	
						SDR BAS	
						RLY BAS	
						I-SdrBa (Intelligent Sounder Base)	
	SK, IDP or SD Devices on Internal SLC	Enter Point	Select Sensor[1,2,3]	DETECTOR[1,2,3,4]	HEAT	No Accessory	Section 9.5.1
						SDR BAS	
						RLY BAS	
						I-SdrBa (Intelligent Sounder Base)	
					PHOTO DUCT	No Accessory	
						DCT RLY	
					2-WIRE SMOKE[1]		
					ACCLIMATE[1,2]	No Accessory	
						SDR BAS	
						RLY BAS	
						I-SdrBa (Intelligent Sounder Base)	
					HEAT HT[1,2]	No Accessory	
						SDR base	
						RLY base	
						I-SdrBa (Intelligent Sounder Base)	

Menu		Options/Defaults					Comments
Point (con't)	SK, IDP or SD Devices on Internal SLC (cont)	Enter Pt	Detector	DETECTOR[1,2,3,4]	PHOT-HEAT[1,2]	No Accessory	Section 9.5.1
						SDR BAS	
						RLY BAS	
						I-SdrBa (Intelligent Sounder Base)	
					BEAM[1,2]		
				SUP DET[1,2,3]	Same function as DETECTOR	LATCH	
						NON-LATCH	
				CO FIRE [1,2,]	CO ALARM/ FIRE ALARM	No Accessory	
						SDR BAS	
						RLY BAS	
						I-SdrBA (Intelligent Sounder Base)	
					CO ALARM/ FIRE SUPR	No Accessory	
						SDR BAS	
						RLY BAS	
						I-SdrBA (Intelligent Sounder Base)	
					CO SUPR/ FIRE ALARM	No Accessory	
						SDR BAS	
						RLY BAS	
						I-SdrBA (Intelligent Sounder Base)	
					CO SUPR/ FIRE SUPR	No Accessory	
						SDR BAS	
						RLY BAS	
						I-SdrBA (Intelligent Sounder Base)	
				W-Detector[1,2,4]	Photo		
					Acclimate[1,2,3,5]		
					Heat		
				W-SUP DET[1,2,4]	Same as W-Detector		
	Internal Power and External Power	Point #	UNUSED				Section 9.5.2
			B NOTIF	NOTIF OUTPUT	Select Group, Supervised Yes or No	Edit Name	
				CONTROL CIRCUIT			

Menu		Options/Defaults					Comments
Point (cont.)	Internal Power and External Power		A NOTIF	NOTIF OUTPUT	Select Group Super-vised Yes or No	Edit Name	Section 9.5.2
				CONTROL CIRCUIT			
			AUX PWR	CONSTANT	Edit Name		
				AUX RESET			
				AUX DOOR			
				AUX SYNC[6]			
			B SWITCH*	MANUAL PULL	Latch and Non-Latch feature only appear for WATERFLOW,FIRE SUPERVISORY, FIRE TAMPER, ZONE AUX1, ZONE AUX2, SYSTEM AUX1, SYSTEM AUX2		
				WATERFLOW			
				FIRE SUPER-VISORY			
				FIRE TAMPER			
				FIRE DRILL			
				SILENCE			
				RESET			
				P.A.S. ACK			
				ZONE AUX 1			
				ZONE AUX2			
				SYSTEM AUX1			
				SYSTEM AUX2			
				MANUAL RELEASE			
				INTER-LOCK			
				STATUS POINT			
			A SWITCH*	Same as B SWITCH			
			B DETECT*	2-WIRE SMOKE		Zone # Edit Name	
				4-WIRE SMOKE			
				CO 4 WIRE DET			
				CO 4 WIRE SUP DET	Latch		
					Non-Latch		
			A DETECT*	2-WIRE SMOKE			
				4-WIRE SMOKE			
				CO 4 WIRE DET			
				CO 4 WIRE SUP DET	Latch		
					Non-Latch		
*Only applicable for RPS-1000							
Point (cont.)	5880/5865	Enter Point #		UNUSED			
				NOTIF	NOTIF OUTPUT	Select Group Edit Name	
					CONTROL CIRCUIT		

Menu		Options/Defaults				Comments
System Options	Communication Options	Auto Time Test	Set the Hour	*02:00AM		Section 9.6.1
			Set the Minutes			
			Select AM/PM			
			Enter Interval	24 hrs,12 hrs, *6 hrs, 4 hrs		
		Phone Lines	For each phone line (1 & 2) select:			
			Dialing Prefix	Up to 9 digits	*none	
			# of Answer Rings	Range: 00-15	*06	
			Select Dialing Option	TT	*TT	
				TT/PL		
				PULSE		
			Rotary Pulse Format	U = 60/40	*U	
				E = 66/34		
			Dial Tone Disabled	Y or N	*N	
			Monitor Line	Y or N	*N	
			Answering Machine Bypass	Y or N	*N	
			Phone Line Unused	Y or N	*N	
		Edit Ethernet	IP Address			
			Subn Mask SubNet			
			Default Gateway			
			DHCP Enable			
		AlarmNet Timers	Ethernet Supervise	75 sec, 90 Sec, 3 min, 5 min, 1 hr, 24 hrs, 30 days, None	*5 Minutes	
			Cellular Supervise	24Hrs, 30 days, none	*24 Hours	
			Old Alarm Time	10 min, 15 min, 30 Minutes, 1 hr, 2 hrs, 4 hrs, 8 hrs, 12 hrs, 24hrs, none	*30 Minutes	
		Phone Line Gains	Dialing	High	*High	
				Low		
				Normal		
			Reporting	Low	*Low	
				Normal		
				High		
	Daytime/Nighttime Sensitivity	Enable/Disable	Yes		*No	Section 9.6.2
			No			
		Day Start	Enter time		*6:00AM	
		Night Start	Enter time		*6:00PM	
		Days of the Week	Select days		*-MTWTF-	
	Holiday Days	Holidays 1 to 18	Enter dates		*01/01, 07/04, 12/24, 12/25	Section 9.6.3

Menu		Options/Defaults				Comments
System Options con't	Time Options	Water Flow Delay	0 - 90 Seconds	*1 sec	Water Flow delay is the number of seconds before a water flow alarm is generated.	Section 9.6.2
		Alarm Verify	60 to 250 seconds	*60 sec		
		Low AC Report Time	0 - 30 hours	*3 hrs		
		AC Freq:	50 Hz		*60Hz	
			60 Hz			
			Internal			
		Clock Display Format	AM/PM		*AM/PM	
			MIL			
		Auto-resound	4 hours		*24 hours	
			24 hours			
	Miscellaneous Options	SYNC Strobes when Silenced	Y		*N	Section 9.6.5
			N			
		Auto Display Events	Y		*N	
			N			
	Daylight Saving Options	Auto Daylight Saving Time	Y		*Y	Section 9.6.6
			N			
		DST Start	Select week: 1st, 2nd, 3rd, 4th or Last		Select month	
		DST End				
	Edit Banner	Refer to Appendix B				Section 9.6.7
	SLC Family	IDP				Section 9.6.8
		SD				
		SK				
Jump Start AutoPrg	Y (Yes) N (No)					Section 9.7
Restore Defaults	Y (Yes) N (No)					Section 9.8
*Default						

1. Available on Internal SLC.
2. Available with SLC Family as SK.
3. Available with SLC Family as IDP
3. Available with SLC Family as SD.
4. Requires wireless Gateway.
6. AUX SYNC setting is only applicable for the B200S/IV Sounder Base.

Section 9: Programming

This section of the manual describes how to manually program the control panel from the built-in annunciator. Each subsection discusses these menu options in detail. All options described in this section can be performed using the HFSS Honeywell Fire Software Suite.

NOTE: Before any customized programming is done, JumpStart® Autoprogramming should be run first. After JumpStart is run, thoroughly test the system. The reason the system should be tested after JumpStart Autoprogramming is because JumpStart automatically programs the system, searching for and configuring all SLC and SBUS devices it finds. JumpStart allows you to confirm the integrity of the installation prior to performing any custom programming. After determining that the hardware is properly installed, custom programming can be performed

9.1 UL 864 Programming Requirements

NOTICE TO USERS, INSTALLERS, AUTHORITIES HAVING JURISDICTION, AND OTHER INVOLVED PARTIES: This product incorporates field programmable software. In order for the product to comply with the requirements in the Standard for Control Units and Accessories for Fire Alarm Systems, UL 864, certain programming features or options must be limited to specific values or not used at all as indicated below.

Programming Option	Menu Item	Permitted in UL 864 (Y/N)	Possible Settings	Settings Permitted in UL 864
Time Options	Auto-Resound	Yes	4 or 24 hrs	4 hours if using SWIFT devices
Time Options	Low AC Report Delay	Yes	0–30 hours	1–3
Display Oldest Event	Y (Enabled)	Yes	Yes & No	Yes
	N (Disabled)	No	Yes & No	No
Alarm Verification	Alarm Verification	Yes	60-250 (confirmation period)	60

9.2 Modules

This section lists the options available under the module option in the program menu. The types of modules available for the control panel are RA-100, RA-1000 or RA-2000 LCD Annunciator, 5824 Serial/Parallel input/output, 5880 LED Input/Output module, 5496 NAC Expander, RPS-1000 Power supply, SK-NIC Network Interface Card, and 5865 LED Annunciator.

9.2.1 Edit Modules

The features that can be edited when this option is selected are, module name, and class of wiring (Class A or Class B).

To edit an existing module, follow these steps:

1. Enter the installer code.
2. Select 7 for Program Menu.
3. Press 1 to enter module menu.
4. Press 1 to edit a module.
5. Use the up or down arrow to select the module you wish to edit.

Editing Module ID

6. Press the up or down arrow key to modify the module ID.

NOTE: Internal devices and SK-NIC are not able to have their module ID edited.

Naming Modules

You can assign an English name to a hardware module to make it easier to recognize on a display.

7. To edit a module name, press the up or down arrow to select each character for the modules name (or press the right arrow to bypass name edit). Press the right arrow to move to the next character.

NOTE: See Appendix B for editing names.

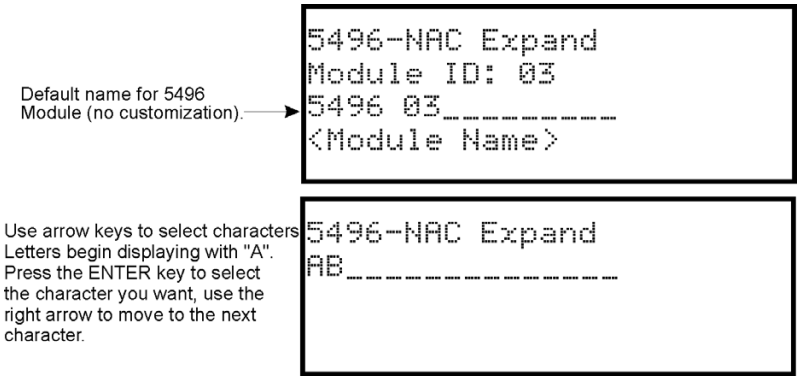

Figure 9.80 Edit module Name Programming Screen Example

Changing Module Options

Each module has a unique set of options that specifically applies to the functionality of the module being edited.

8. Use the left and right arrow keys to move between available options.
9. Option settings are edited by pressing the up or down arrow.

9.2.2 Adding a Module

You must be in the Main Menu to perform this task. If necessary, enter the Installer Code. If you need to add a new hardware module to the system, follow the steps below.

1. Enter the installer code.
2. Select 7 for Program Menu.
3. Press 1 to enter module menu.
4. Press 2 to add a module.
5. From the next screen, use the up or down arrow to choose a module type to add from the <New Module Type> screen.

   The screen will display “Adding module [#]...” for a few moments. You will be returned to the <New Module Type> screen where you can select another module if desired.

Save changes when you exit the Program Menu or the new module will not be added.

NOTE: If you add a module that has not been physically connected, the panel will go into trouble after it reinitializes (when you exit the Program Menu). When the new module is attached, the trouble will correct itself automatically

9.2.3 Deleting a Module

If you ever need to delete a module, follow these steps.

You must be in the Main Menu to perform this task. If necessary, enter the Installer Code.

1. Enter the installer code.
2. Select 7 for Program Menu.
3. Press 1 to enter module menu.
4. Press 3 to delete a module.
5. From the next screen, select a module to delete. A warning screen will display.
6. If you want to proceed with deleting the module, select Yes. To cancel, select No.

9.2.4 View Module List

1. Enter the installer code.
2. Select 7 for Program Menu.
3. Press 1 to enter module menu.
4. Press 4 to view module list.

9.3 Zone

Through the zone option in the program menu you can edit, add, delete, and view zone points. Selections made here affect all detectors and switches in the zone. Up to 125 zones can be used in the system.

9.3.1 Edit Zone

Features that can be edited through the edit zone option are zone name, zone properties (which includes, zone type, and detector sensitivity), and zone accessory options.

To edit a zone, follow these steps:

1. Enter the installer code.
2. Select 7 for Program Menu.
3. Press 2 to enter zone menu.
4. Press 1 to edit a zone.
5. Enter the zone number, then press ENTER.

Edit Zone Name

6. To edit the zone name, press 1.

You can use words to display a descriptive name for the a zone.

NOTE: See Appendix B for editing names

Edit Zone Properties

Zone properties consist of, alarm delay characteristics, and heat detector sensitivity.

1. Do steps 1 through 5 of Section 9.3.1.

Pres 2 to edit the properties of the selected zone.

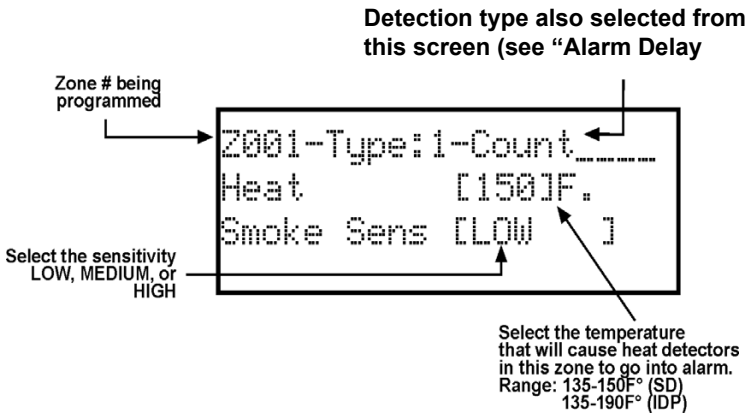

Figure 9.81 Edit Zone Properties

NOTE: You only see smoke sensitivity on the IFP-75 if the daytime/nighttime sensitivity is off under System Options. (See Section "Daytime/Nighttime Sensitivity" on page 119). Otherwise if you have Daytime/Nighttime sensitivity on, this will bring up a Smoke Sens Day and Night, 2 separate widgets with sensitivity selection being either low, med, or high for each.

■ Alarm Delay Characteristics

The programmed zone type is provided for user reference only. To modify the zone type, use the HFSS Honeywell Fire Software Suite.

Table 9.18 list the delay choices and a description of each. Then press ENTER.

Type of Delay	Description
1-Count	One Count (No Delay). When this option is enabled, an alarm occurs immediately when a single device of any of the following types goes into alarm: detector, manual pull, water flow, Aux1 or Aux2. This is considered the most typical operation and is the default for all zones.
2-Count	When this type of alarm delay is used, two or more detectors within the zone must go into alarm in order for the zone to report an alarm. Switches of type manual pull, Detector switches, water flow, Aux1 and Aux2 are an exception; they will cause an alarm when only one switch is in alarm. When a single detector is in alarm in a 2-Count zone, the system enters a prealarm condition. In a prealarm condition, the touchpad PZT beeps and the annunciator display indicates that a prealarm has occurred. If the zone has been mapped to an output group for the prealarm event, the output group will activate. The prealarm will not be reported to the central station. When two count is used detector spacing shall be cut in half. You should not use the alarm verification feature, and no delay shall be used.
Alarm Verification	Alarm verification is an optional false alarm prevention feature that verifies an alarm condition by resetting the smoke detector. If the alarm condition still exists by the time the reset cycle has completed, the detector will go into alarm. If the detector is no longer in alarm, no report will go to the central station. The alarm verification sequence is ignored if the zone is already in alarm.

Table 9.18 Alarm Delay Types

Type of Delay	Description
PAS-Positive Alarm Sequence	This option is intended to be used with an acknowledge switch. An alarm is delayed for 15 seconds, giving on-site personnel a chance to investigate the alarm. If the acknowledge switch is not activated within 15 seconds, an alarm occurs automatically. If this option is enabled for a zone, the zone will respond to an alarm condition as follows: • The zone will not go into alarm for 15 seconds to allow an on-site operator to activate the acknowledge switch. • If the operator does not press the acknowledge switch within 15 seconds, the zone will go into alarm. • If the operator presses the acknowledge switch within 15 seconds, a 180-second time-frame will begin counting down. This time-frame allows the operator to investigate the cause of the alarm. • If the operator performs a reset within 180 seconds, the alarm will not occur. • If the operator does not perform a reset within 180 seconds, an alarm will occur automatically. • The P.A.S. feature will be overridden if another alarm occurs.
SNGL ILOCK	See Section 10.7.1 for single interlock releasing operation.
DBL ILOCK	See Section 10.7.2 for double interlock releasing operation.
Note: SK-FIRE-CO, IDP-FIRE-CO and other CO detectors can only be installed in a 1 count zone.	

Table 9.18 Alarm Delay Types

■ Heat Detector Sensitivity

Use this feature to set the temperature at which high temperature detectors will respond. All detectors in the zone will respond in the same way. The range for the SD505-HEAT heat detector is from 135°F to 150°F. The range for IDP/SK-Heat-HT heat detector is from 135°F to 190°F.

The SD505-HEAT and IDP/SK-Heat-HT heat detectors are absolute temperature devices. This means that they respond to an alarm immediately if the temperature in the zone goes above the programmed temperature.

2. Enter the temperature at which the heat detector will respond. Or use the up or down arrow keys to scroll through the range. Then press ENTER.

■ Smoke Detector Sensitivity

IMPORTANT!
Drift compensation is automatic for all smoke detectors (photoelectric and ionization). The feature is always in effect, no programming is required. See Section 10.4.11 for information about how to check if a detector is in UL compliance.

All detectors in the zone will respond as programmed in this menu location.

Detector Protocol	Type of Smoke Detector	Choices	Comments
SD	SD505-PHOTO	Low (3.5% obscurity)	If the day/night sensitivity option is selected, you can have different sensitivity settings during the day and at night. You can determine the days of the week that Day/Night Sensitivity will automatically adjust. You can also designate specific days as Holidays. Holiday and weekend days use night sensitivity for the entire day
		Medium (2.5% obscurity)	
		High (1.5% obscurity)	
	SD505-DUCT& SD505-DUCTR	Fixed	Low, Medium and High settings have no effect for photoelectric duct detectors. Photoelectric duct detector sensitivity is always 1.1% per foot. Day and night settings also have no effect on these detectors.
	SD505-DUCT& SD505-DUCTR	Fixed	Low, Medium, or High settings have no effect for ionization duct detectors. Ionization duct detector sensitivity is always 75 MIC (0.8%) regardless of Low, Medium or High setting. Day and night settings also have no effect on these detectors.
IDP	IDP-PHOTO, IDP-ACCLIMATE, & IDP-PHOTO-T	Low (3.5% obscurity)	If the day/night sensitivity option is selected, you can have different sensitivity settings during the day and at night. You can determine the days of the week that Day/Night Sensitivity will automatically adjust. You can also designate specific days as Holidays. Holiday and weekend days use night sensitivity for the entire day
		Medium (2.5% obscurity)	
		High (1.5% obscurity)	
	DNR with IDP-PHOTOR or PHOTO	Low (2.5% obscurity)	
		Medium (2.0% obscurity)	
		High (1.5% obscurity)	

Table 9.19 : SD & IDP Detector Sensitivity Choices*

** Automatic drift compensation is always in effect for all detectors. See Section 10.4.11 for information about how to check if a detector is in compliance.*

3. Use the up or down arrow to scroll through the options, then press ENTER.

NOTE: If the SLC protocol is changed from IDP/SK to SD and a zone's sensitivity is higher than the SD limit, the zone sensitivity will be set to the max value, 150, for the SD family.

Zone Accessory Options

1. Do steps 1 through 5 of Section Section 9.3.1.
2. Press 3 to edit the Zone's Accessory options.

Single or Multi-Station cadence pattern (choose from Patterns 00 to 02, 23 if using IDP or SK. Choose from 00-16, 23 is using SD devices). See "Cadence Patterns" on page 172.

CO Single and Multistation Cadence (choose from Cadence Patterns 00 to 02, 23 for IDP or SK devices).

NOTE: The B200S-WH / IV Sounder base provides the recommended CO cadence pattern.

NOTE: If the SLC protocol is changed from SD to IDP/SK series and the cadence is no longer valid for IDP/SK, the zone cadence will be set to constant on.

Local Zone (choose Y or N, for Yes or No).

9.3.2 View Zone Points

To view the points in a zone, follow these steps:

1. Enter the installer code. The panel will automatically go to the main menu.
2. Select 7 for Panel Programming.
3. Press 2 to enter zone menu.
4. Press 2 to view zone points.
5. Enter the number of the zone you wish to view, then press ENTER.

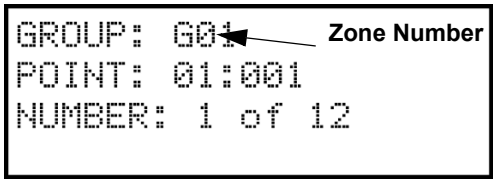

Figure 9.82 View Zone Points Screen

9.4 Group

An output group is made up of output points that have been programmed to respond in the same way. Output groups simplify programming because you do not have to program each individual point. Once you have defined the characteristics of output groups, you can assign each point to the appropriate group. Up to 125 output groups can be defined.

9.4.1 Edit Group

In the edit group option you can program the name of an output group (Section , "Edit Group Name") and change the properties of that group.

To edit a group, follow these steps:

1. Enter the installer code.
2. Select 7 for Program Menu.
3. Press 3 to enter group menu.
4. Press 1 to edit group.
5. Enter the number of the group you wish to edit, then press ENTER.

Edit Group Name

6. To edit the group name, press 1.

You can use words to display a descriptive name for a group.

NOTE: See Appendix B for editing names

Edit Group Properties

7. To edit the group properties, Press 2 from the edit group menu.

The Edit Group Menu allows you to select options for each group for the following items:

- Template Override: Y or N
- When Template override is Yes. Template Override Cadence is available.

- See Section 9.4.3 for more information.

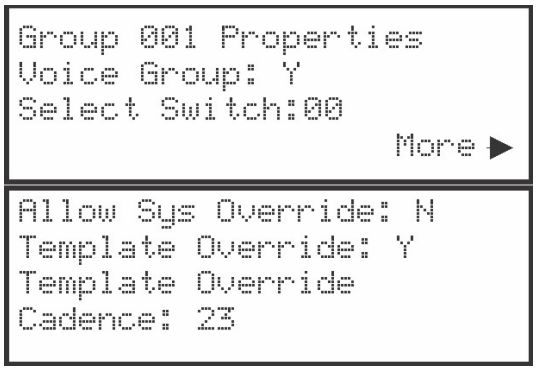

Figure 9.83 Group Properties Screen Programming Options

9.4.2 View Group Points

1. Enter the installer code. The panel will automatically go to the main menu.
2. Select 7 for Panel Programming.
3. Press 3 to enter group menu.
4. Press 2 to view group points.
5. Enter the group number, then press ENTER.

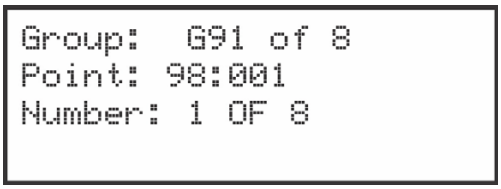

Figure 9.84 View Group Points

9.4.3 Edit OPG Template

1. Enter the installer code. The panel will automatically go to the main menu.
2. Select 7 for Panel Programming.
3. Press 3 to enter group menu.
4. Press 3 to edit OPG Template.
5. Enter the Template number, then press ENTER
6. Press ENTER on the template name to edit the name.

You can use words to display a descriptive name for a group.

NOTE: See Appendix B for editing names

7. Right arrow to the OPG and select Yes or No to select which output group to include in the template.

9.5 Point

You may need to change characteristics of individual input points (detectors and switches) even after using JumpStart Autoprogramming. This section explains how to change options for: type of point, latching/non-latching, silenceable/non-silenceable, zone assignment (input points), detector accessory base options, group assignment (output points), and point name.

9.5.1 Point Programming For SLC

To program for points, follow these steps:

1. Enter the installer code.
2. Select 7 for Program Menu.
3. Press 4 to enter point menu.
4. Press the up or down arrows to select the desired module. refer to Section 8.5 Quick Reference Table for available choices.
5. Enter the number of the point you wish to edit, then press ENTER.

6. Select the type of device by pressing the up or down arrows. Refer to Table 9.20 under the column heading “Type Selection” for a list of choices.

Type Selection	Function	Latching Option	Comments
UNUSED			
SD DETECTOR	PHOTO		
	ION		
	HEAT		
	PHOT DUCT		
	2WIRE SMK		
SD SUP DET	SUP PHOTO	Latching Non Latching	
	SUP ION		
	SUP HEAT		
IDP DETECTOR	PHOTO		
	ION		
	HEAT		
	PHOT DUCT		
	2WIRE SMK		
	ACCLIMATE		
	HEAT HT		
	PHOTO-HEAT		
	BEAM		
IDP SUP DETECTOR	SUP PHOTO DUCT	Latching Non Latching	Supervisory switches can be latching or non-latching.
	SUP SMOKE PHOTO		
	SUP SMOKE ION		
	SUP HEAT		
	SUP ACCLIMATE		
	SUP HEAT HT		
	SUP SMOKE PHOTO/HEAT		
	SUP SMOKE BEAM		
CO SMOKE DETECTOR	ALRM CO/ALRM FIRE		
	SUP CO/ALRM FIRE		
	ALRM CO/SUP FIRE		
	SUP CO/SUP FIRE	Latching Non Latching	Detectors programmed as Supervisory can be latching or non-latching.

Table 9.20 : Point Programming for Internal SLC Module

Type Selection	Function	Latching Option	Comments
SWITCH (cont.)	MAN_PULL		Use this switch type for manual pull stations. This input is always latched. The switch can clear only when an alarm is reset.
	WATERFLOW	Latching Non Latching	Use this switch type for monitoring water flow in a sprinkler system. Switch closure will cause a sprinkler alarm. Water flow switches can be programmed as latching or non-latching. You can program a delay of up to 90 seconds to be used with a water flow switch. The delay allows for normal, brief changes in sprinkler system water pressure. The water flow alarm will not activate unless the switch is active for the programmed delay time. *Note: Waterflow delay of the FACP and the waterflow device shall not exceed 90 seconds.* If a delay is used, the system begins counting down when the switch closes. If the switch opens (restores) before the timer expires, a water flow alarm is not generated. If the water flow switch remains closed after the timer expires, a water flow alarm will be generated.
	SUPERVSY	Latching Non Latching	Use this switch type for tamper monitoring of sprinklers and other fire protection devices. If a contact closes, a sprinkler supervisory event will be generated. Supervisory switches can be latching or non-latching.
	FIRE DRILL		System-level, non latching switch. This switch is an alternative way of causing a fire drill. It has the same operation as the fire drill option available from the annunciator. When the switch is activated, a fire drill begins; when the switch is de-activated, a fire drill ends.
	SILENCE		System-level switch provides an alternate way to silence the system; same effect as pressing the Silence key.
	RESET		System-level switch provides an alternate way to reset the system; same effect as pressing the Reset key.
	PAS_ACK		Positive acknowledge switch. This switch must be used in zones programmed as Positive Alarm Sequence (see Table 9.18). If an acknowledge switch closes when an alarm or trouble condition is not already in progress, a trouble will occur. You must use a UL listed normally open, momentary switch type. The switch must be rated at 5V, 100 mA (minimum) and be used with an EOL resistor for supervision.
	ZN_AUX1	Latching	Use these switch types if you want to monitor special zone-level conditions.
		Non Latching	
	ZN_AUX2	Latching	
		Non Latching	
	SYS_AUX1	Latching	Use these switch types if you want to monitor special system-wide conditions.
		Non Latching	
	SYS_AUX2	Latching	
		Non Latching	
	DETECT SW		Used to monitor conventional 4-wire detectors, a contact closure will generate a detector alarm event.
SWITCH (cont.)	TAMPER	Latching	Performs identically to a supervisory switch, but will be indicated as a tamper switch on the LCD annunciator.
		Non Latching	
	MAN REL		Manual release switch, typically a pull station.
	ILOCK		Interlock release switch input.
	CO DETECT SW		CO Detector Switch
	CO SUPERVISORY DETECT SW		CO Supervisory Detector Switch
	STATUS PT		Status Point Switch

Table 9.20 : Point Programming for Internal SLC Module

Type Selection	Function	Latching Option	Comments
NOTIF	OUTPUT PT	Select Group	Output Point, a general use notification type. Use for driving standard notification appliances.
	AUX CONST		Use constant power for applications that require a constant auxiliary power source. Power is always present at Constant circuits.
	AUX RESET		Use for auxiliary power, resettable applications. See Section “Resettable Power” on page 59 to learn how this option operates.
	AUX DOOR		Use for auxiliary power, door holder applications. For example, if you were using an auxiliary power supply for door holders, you would use this option. See Section “Door Holder Power” on page 59 to learn how this option operates.
RELAY	OUTPUT PT	Select Group	Output Point, a general use relay type. Use for applications requiring a relay, such as elevator recall.
	AUX RESET		Use for auxiliary power, resettable applications. See Section , "Resettable Power" to learn how this option operates.
	AUX DOOR		Use for auxiliary power, door holder applications. For example, if you were using an auxiliary power supply for door holders, you would use this option. See Section , "Door Holder Power" for a description of how this option operates.

Table 9.20 : Point Programming for Internal SLC Module

9.5.2 Point Programming For Internal or External Power Module

To program for an internal or external power module points, follow these steps:

1. Enter the installer code.
2. Select 7 for Program Menu.
3. Press 4 to enter point menu.
4. Press the up or down arrows to select the desired module. Press ENTER. Refer to Section 8.5 for available choices.
5. Enter the number of the circuit or point you wish to edit. Refer to Table 9.21 for available selections.
6. Press ENTER.
7. Select the type by pressing the up or down arrows, then press ENTER.
8. Select the function by pressing the up or down arrows, then press ENTER.
9. Select the group by pressing the up or down arrows, then press ENTER.
10. Edit point name. Press the right arrow to skip point name edit. See Section 9.5.

11. Repeat Steps 1 through 10 for all circuits.

Choices	Type Selections	Function Selections for each Type	Comments
Enter Point or Circuit			
Select Type	UNUSED		
	NOTIF OUT		
	CTRL CKT		
	AUX PWR	CONSTANT	Constant auxiliary power.
		RESETTABLE	Resettable auxiliary power.
		DOOR	Door holder auxiliary power.
		AUX SYNC	Sounder Sync auxiliary power for System Sensor
	B SWITCH*	MAN PULL	Refer to comments column of Table 9.20 for description of these options Latch or Non-latching feature only appears for waterflow, supervisory, tamper, zone aux1, zone aux2, system aux1, and system aux2
		WATERFLOW	
		SUPERVSY	
		TAMPER	
		FIRE DRILL	
		SILENCE	
		RESET	
		PAS_ACK	
		ZN_AUX1	
		ZN_AUX2	
		SYS_AUX1	
		SYS_AUX2	
		MAN REL	
		ILOCK	
		STATUS POINT	Non-latching - Used to activate an ancillary Output Group that does not active alarm, sound PZT, display status or report events. Reset has no affect on this point
	A SWITCH*	Same as B SWITCH	
	B DETECTOR*	2-WIRE SMOKE	Used for Class B, 2-wire detectors.
		4-WIRE SMOKE	Used for Class B, 4-wire detectors.
		CO 4-WIRE DET	Used for Class B, 4-wire CO detectors.
		CO 4-WIRE SUP DET	Latching or Non-latching used for Class B, 4-wire CO Supervisory detectors
	A DETECTOR*	2-WIRE SMOKE	Used for Class A, 2-wire detectors.
		4-WIRE SMOKE	Used for Class A, 4-wire detectors.
		CO 4-WIRE DET	Used for Class A, 4-wire CO detectors.
		CO 4-WIRE SUP DET	Latching or Non-latching used for Class A, 4-wire CO Supervisory detectors
Select Group			Group or Zone selection will appear depending on the type selected
Edit Name			Edit name. See Section 9.5.2
*Only applicable on RPS-1000			

Table 9.21 Menu choices for Internal/External Power Modules

9.5.3 Point Programming For 5880 and 5865 Modules

To program for a 5880 or 5865 module points, follow these steps:

1. Enter the installer code.
2. Select 7 for Program Menu.
3. Press 4 to enter point menu.

4. Press the up or down arrows to select the desired module. Refer to Section 8.5 for available choices. Press ENTER.

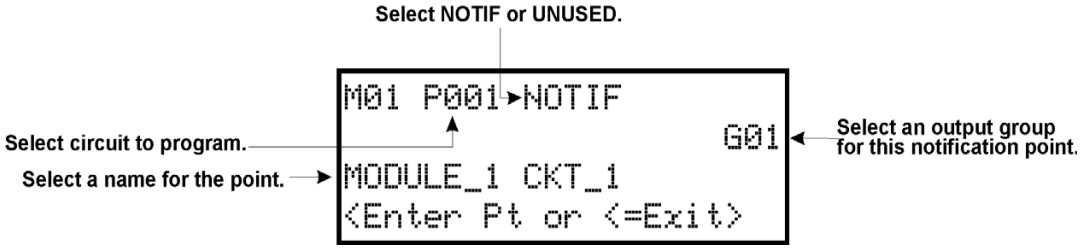

Figure 9.85 Programming Points Screen for 5880 and 5865 Modules

5. Enter the point number, then press ENTER.
6. Press the up or down arrows to select the type (Notification or unused). Press ENTER.
7. Press the up or down arrows to select the desired Group, then press ENTER.
8. Edit module name. See Section 9.5.3. Or, Press the right arrow to skip module name edit.
9. Repeat Steps 1 through 8 for all points.

9.6 System Options

This section of the manual explains how to customize software options that affect general operation of the system.This includes such items as: Communication Options, Daytime/Nighttime Sensitivity, holiday schedule, telephone and reporting account options. Refer to each individual subsection for complete instructions.

9.6.1 Communication Options

Auto Test Time

To access the Auto Test Time screen:

1. Enter the installer code.
2. Select 7 for Program Menu.
3. Select 5 for System Options.
4. From the next menu, select 1 for Communication Options.
5. Select 1 for Auto Test Time.
6. Enter the hour you desire the control panel to send an automatic test report (or press the up or down arrow key), then press ENTER.
7. Enter the minutes (or press the up or down arrow key), then press ENTER.
8. Select AM or PM by pressing the up or down arrow key, then press ENTER.
9. Select Report Time Interval by pressing the up or down arrow key, then press ENTER. Time Interval selections are 24hr, 12hr, 6hr and 4 hr.

NOTE: AM and PM are only available if the panel “Clock Options” are set for AMPM mode. Otherwise the clock is in military time and AMPM is not selectable.

Phone Lines

To access the phone lines screen:

1. Enter the installer code.
2. Select 7 for Program Menu.
3. From the Program Menu, select 5 for System Options.
4. Select 1 for Communication Options
5. Select 2 for the Phone Lines menu.

6. Select the phone line to be edited (1 or 2) by pressing the up or down arrow, then press ENTER.

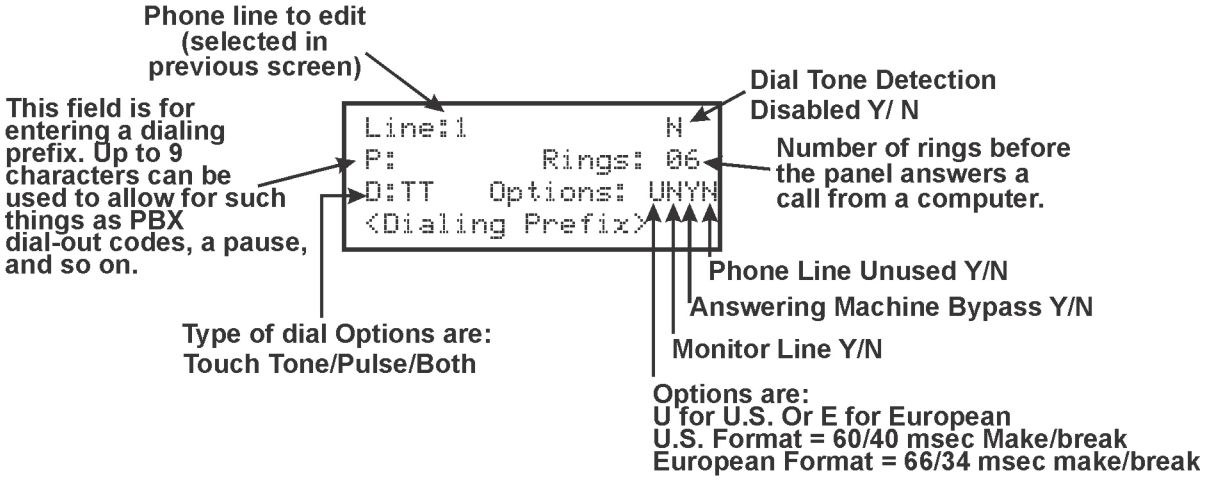

***Use Y to enable, N to disable, except as noted.**

Figure 9.86 Phone Lines Editing Screen

■ Dialing Prefix

Enter up to 9 characters to be used for such things as PBX dial-out codes, a pause, and so on. The following special characters are available:

#	Pound (or number) key on the telephone
*	Star key on the telephone
,	Comma (character for 2-second pause)

Use the number buttons on the annunciator or the up- and down-arrow keys to select special characters. Characters begin displaying after "9". See Figure 9.88 for an example.

7. Enter a dialing prefix (if needed), then press ENTER. Or, Press the right arrow to bypass the dialing prefix option.

■ Number of Answer Rings

This option is used in conjunction with the HFSS Honeywell Fire Software Suite. Use the option to determine the number of rings before the panel answers a call from the computer. Range is 00-15 rings. This option is factory-programmed as 06 rings, which should be compatible for most installations where the answering machine bypass feature is used. You may need to adjust it depending on the installation's telephone system.

The selection made here must match the programming for this option in the Communication Configuration dialog box of the HFSS Honeywell Fire Software Suite.

8. Enter the desired number of answer rings, then press ENTER.

■ Dial Option (TouchTone or Pulse)

9. Press the up or down arrow to select the dial option, then press ENTER.

Dial Option	Description
PULSE	If this option is selected, only pulse dialing will be used for this phone line.
TT	TouchTone dialing. If this option is selected, only TouchTone dialing will be used for this phone line.
TT/PL	TouchTone alternating with pulse. If this option is selected, the communicator will first attempt to use TouchTone. It will switch to pulse if TouchTone is not successful on the first attempt. It will continue to alternate between TT and pulse for additional attempts.

■ Dial Format

10. Press the up or down arrow to select the pulse ratio for rotary dialing option, then press ENTER.
    Options are:

U	U.S. standard format. Uses the 60 msec / 40 msec make/break ratio.
E	European format. Uses the 66 msec / 34 msec make/break ratio.

■ Dial Tone Detection Disabled

11. Select Y (do disable) or N (don't disable) by pressing the up or down arrow key, then press ENTER.

■ Monitor Line

Enable the line monitor for each phone line that will be used. See Figure 9.86 for location of this field on the phone lines screen. When the phone line monitor has been enabled for a phone line, a trouble condition will occur if the line is not connected. If a phone line will not be used, it must be disabled.

12. Select Y (monitor line) or N (don't monitor line) by pressing the up or down arrow, then press ENTER.

■ Answering Machine Bypass

This option is used in conjunction with the HFSS Honeywell Fire Software Suite. This feature ensures that an answering machine will not interfere with communication between the panel and the computer. If an answering machine is used at the panel site, enable this feature; if an answering machine is not used, disable the feature.

This option is factory-programmed as Yes (enabled).

The selection made here must match the programming for this option in the Communication Configuration dialog box of the HFSS Honeywell Fire Software Suite.

13. Select Y (answering machine bypass enabled) or N (answering machine bypass disabled) by pressing the up or down arrow, then press ENTER.

■ Phone Line Unused

This option is used so that you can set unused phones lines to "Yes", so no auto-test will be sent through that line.

This option is factory programmed as No.

14. Select Y or N by pressing the up or down arrow key, then press ENTER.

Edit Ethernet

1. Enter the installer code. The panel will automatically go to the main menu.
2. Select 7 for Panel Programming.
3. Select 5 for System Options.
4. From the next menu, select 1 for Communication Options.
5. Select 3 for Edit Ethernet.

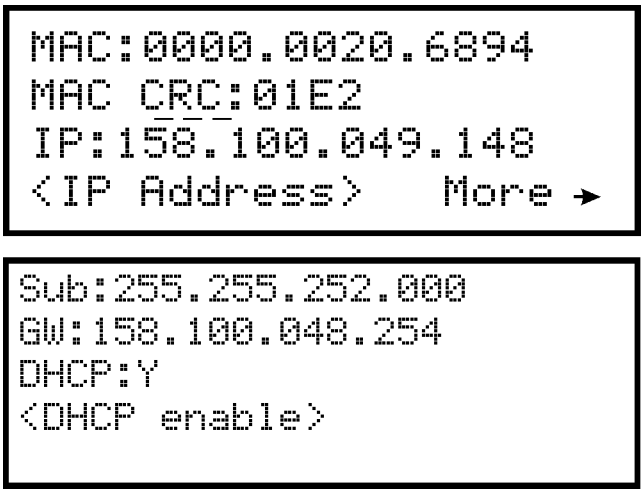

Figure 9.87 Edit Ethernet Message

AlarmNet Timers

1. Enter the installer code. The panel will automatically go to the main menu.
2. Select 7 for Panel Programming.
3. Select 5 for System Options.
4. From the next menu, select 1 for Communication Options.
5. Select 4 for AlarmNet Timers.
6. The available options for AlarmNet Timers are as follows:
   - Ethernet: *5 minutes, 3 minutes, 90 seconds, 75 seconds, none, 30 days, 24 hours, 1 hour.
   - Cellular: *24 hours, none, 30 days

• Old Alarm *30 minutes, 15 minutes, 10 minutes, none, 24 hours,12 hours, 6 hours, 4 hours,2 hours, 1 hour *defaults

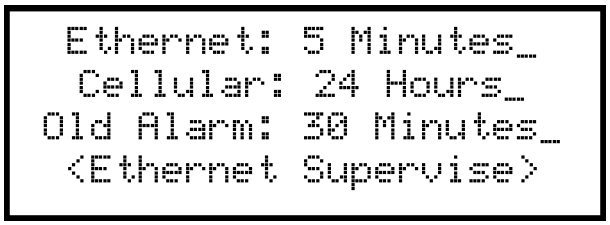

Figure 9.88 AlarmNet Timers

Phone Line Gains

1. Enter the installer code. The panel will automatically go to the main menu.
2. Select 7 for Panel Programming.
3. Select 5 for System Options.
4. From the next menu, select 1 for Communication Options.
5. Select 5 for Phone Line Gains
6. The available options:
    - Dialing: Low, *High (default), Normal
    - Reporting: *Low (default), High, Normal

Figure 9.89 Phone Line Gains

9.6.2 Daytime/Nighttime Sensitivity

If you need to change the time that sensitivity levels take effect (that is, the time that “Day” and “Night” begin), follow these steps.

1. Enter the installer code.
2. Select 7 for Program Menu.
3. Select 5 for System Options.
4. From the System Options Menu, select 2 for Day/Night Sense.
   A screen similar to the one shown in “Changing Day/Night Sensitivity Time” on page 119 will display.

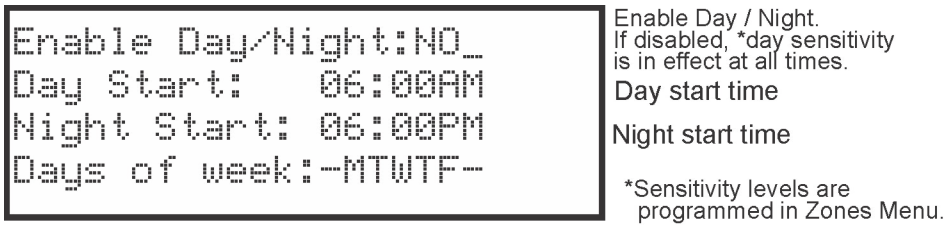

In this example, Day time sensitivity levels will be observed between 6:00 AM and 6:00 PM Monday through Friday. Night time sensitivity levels will be observed between 6:00 PM and 6:00 AM Monday through Friday and all day on Saturday and Sunday.

Figure 9.90 Changing Day/Night Sensitivity Time

9.6.3 Holiday Days

Up to 18 dates can be designated as holidays. When day/night sensitivity is enabled, all photoelectric smoke detectors in the system will use night sensitivity for the entire day on days designated as holidays (see Section “Holiday Days” on page 119).

To add or change a holiday, follow these steps.

1. Enter the installer code.

2. Select 7 for Program Menu.
3. Select 5 for System Options.
4. Select 3 for Holiday Days.

NOTE: For most installations, holiday programming will need to be performed each year to ensure correct dates.

5. Select the holiday schedules you wish to edit (1- holidays 1 - 9, 2- holidays 10 - 18).

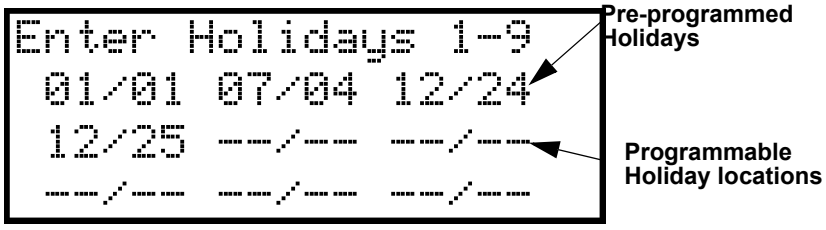

Figure 9.91 Edit Holidays Screen

6. Enter the month of the Holiday, then press ENTER.
7. Enter the day of the month for the Holiday, then press ENTER.
8. Repeat steps 6 and 7 for any remaining holidays you wish to program.

9.6.4 Time Options

Through this programming option you can set the water flow delay time, low AC report delay, enable or disable automatic daylight savings time adjustment, clock format, and AC clock frequency.

Water Flow Delay

You can program a delay of 0-90 seconds (zero means no delay) to be used in conjunction with a water flow switch. The delay is system-wide. All water flow switches on the system will use the same delay period.

To access the screen for programming water flow delay, follow these steps:

1. Enter the installer code.
2. Select 7 for Program Menu.
3. Select 5 for System Options.
4. Select 4 for Time Options.

   A screen similar to the one shown in Figure 9.92 will display.

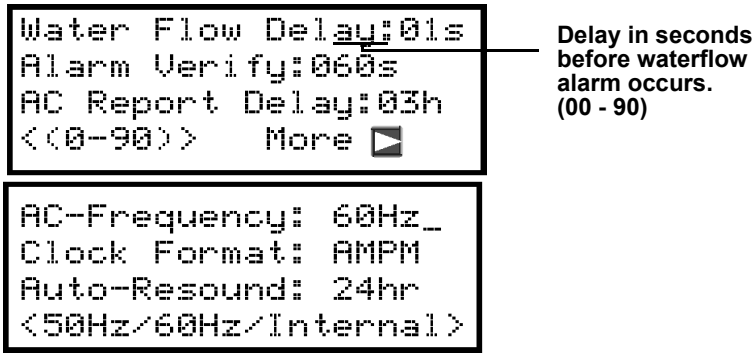

Figure 9.92 Water Flow Delay Programming Screen

5. Enter the number of seconds (0 to 90) to delay an a water flow switch alarm, then press ENTER.

Alarm Verify

You can set the alarm verification time from 60 to 250 seconds (default is 60 seconds).

To set the alarm verification:

6. Enter the desired number of seconds for the alarm verification time.
7. Press the right arrow or ENTER to make your selection and move to the next programming option.

AC Report Delay

NOTE: You must select 1-3 hours in UL central station installations and UL remote signaling installations

You can adjust the number of hours before a Low AC report will be sent to the central station.

To program low AC report delay, follow these steps:.

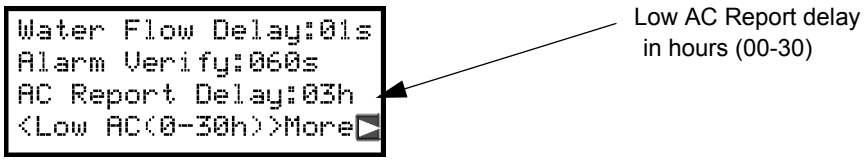

Figure 9.93 Low AC Report Delay Programming Screen

8. Enter the number of hours before a low AC report will be sent to the central station, then press ENTER.

AC Line Frequency

The panel's AC line frequency is selectable for 60 Hz or Internal. AC Frequency feature dictates how the control panel will calculate time based on the AC line frequency used in the installation site. The "Internal" option can be used in areas where the AC line frequency is not dependable and you want the panel to calculate time from the internal crystal. The internal crystal is not as accurate as the AC power source and 60 Hz should normally be selected. The panel defaults to the 60 Hz. selection.

To change the AC line frequency, continue programming from steps above:

9. Select 60 or Intl, by pressing the up or down arrow, then press ENTER.

Clock Display Format (AM/PM or Military)

To change the system clock display format, continue programming from step 8 above:

10. Select AMPM (for AM/PM display format) or MIL (for military or 24 hr display format) by pressing the up or down arrow, then press ENTER.

Auto-Resound (4 or 24 hours)

The system resound time period can be modified from the default value 24 hours to 4 hours. This setting adjusts when the FACP will automatically resound events after being silenced. Set this option to 4 hours when using SWIFT devices

9.6.5 Miscellaneous Options

Through this programming option you can turn on or off strobe synchronization during silence, display status at idle (auto display event), report by zone or point, and single key ack.

To edit miscellaneous options:

1. Enter the installer code.
2. Select 7 for Program Menu.
3. Select 5 for System Options.
4. Select 5 for Miscellaneous Options.

Strobes Active when Silenced

When "SYNC Strobe:" is selected as Y (Yes), the strobes will continue to flash when the system is silenced and will stop flashing when the system is reset.

NOTE: The "SYNC Strobe:" only functions with outputs that use a synchronized output pattern.

5. Press the up or down arrow key to toggle this selection between Y (Yes) or N (No).
6. Press right arrow key or ENTER to make your selection and move to the next programming option.

Auto Display Events

When this feature is programmed Y (Yes), the highest priority event of the system in control will automatically display on the control panel and remote annunciators after there has been no activity on any system touch pad for two minutes.

7. Press the up or down arrow key to toggle this selection between Y (Yes) or N (No).
8. Press right arrow key or ENTER to make your selection and move to the next programming option.

9.6.6 Daylight Saving Options

To edit Daylight Savings:

NOTE: For UL installations the alarm verification time can not be less than 60 seconds.

1. Enter the installer code.
2. Select 7 for Program Menu.
3. Select 5 for System Options.
4. Select 6 for Daylight Savings.

Automatic Daylight Saving Adjustment

The control panel has an automatic DST (Daylight Saving Time) adjustment feature. If this feature is not enabled (set to *No*), the Daylight Saving Time change is not made to the system clock.

To enable or disable DST adjustment continue programming:

5. Select Y (enabled) or N (disabled) by pressing the up or down arrow, then press ENTER.

Daylight Saving Time Start and End

This option lets you to adjust the week and month Daylight Saving Time (DST) starts and ends. For this feature to work, you must enable (set to *Yes*) the Automatic Daylight Savings Adjustment option under Daylight Savings Options. The default values for the DST Start and End are:

DST Start: The second Sunday in March
DST End: The first Sunday in November

To set the start and end for Daylight Saving Time:

6. Press the up or down arrow to select the week (1st, 2nd, etc.) Daylight Saving Time starts, then press ENTER to make your selection and move to the month setting.
7. Press the up or down arrow to select the month (January – December) Daylight Saving Time starts, then press ENTER to make your selection and move to the DST End option.
8. Press the up or down arrow to select the week (1st, 2nd, etc.) Daylight Saving Time ends, then press ENTER to make your selection and move to the month setting.
9. Press the up or down arrow to select the month (January – December) Daylight Saving Time ends, then press ENTER two times to make your selection and exit.

9.6.7 Edit Banner

The banner is the message that displays on the panel LCD when the system is normal, that is, when no alarms or troubles exist and no one is currently using system menus. You can create a customized message, which can be up to 40 characters, two lines of 20 characters each.

If you do not create a customized message, the system will use the internal banner. You cannot change the internal banner.

To customize the banner display message:

1. Enter the installer code.
2. Select 7 for Program Menu.
3. Select 5 for System Options.
4. Select 7 for Edit Banner.

NOTE: See Appendix B for a instructions on how to edit the banner

5. Select each character of a word by pressing the up or down arrow, then press the right arrow key to move to the next character.
6. When word or sentence is complete press ENTER to move to line two of the custom banner.

9.6.8 SLC Family

The IFP-75 supports SD, SK Series, or Intelligent Device Protocol (IDP) SLC devices. You must configure the IFP-75 to accept the protocol of the devices you are installing. You cannot mix SLC devices of different protocols.

1. Enter the installer code.
2. Select 7 for Program Menu.
3. Select 5 for System Options.
4. Select 8 for SLC Family.
5. Press UP arrow to select the desired SLC device type.
6. Press ENTER to accept the displayed SLC device type.

NOTE: When changing SLC type from one protocol to another, the following message will appear

:

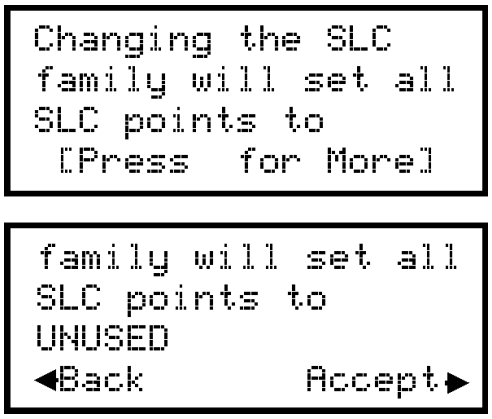

Figure 9.94 SLC family change

9.7 JumpStart® Autoprogramming

Panels support an incremental JumpStart. For Example: After initial JumpStart®& customization, if you add more devices, when you JumpStart again the additional devices are added but you do not lose any of your previous custom programming

To run JumpStart Autoprogramming:

1. Enter the installer code.
2. Select 7 for Program Menu.
3. Select 6 for JumpStart Autoprogramming.
4. Press the up or down arrow to select “Yes” from the warning screen.
5. Press ENTER.

9.8 Restore Defaults

This option allows you to restore the panel back to factory defaults. All programming will be lost.

1. Enter the installer code. The panel will automatically go to the main menu.
2. Select 7 for Panel Programming.
3. Select 7 for Restore Defaults.
4. Press the up or down arrow key to select YES or NO from the warning screen. Then press ENTER.

Section 10: System Operation

Operation of the control panel is simple. Menus guide you step-by-step through operations. This section of the manual is an overview of the operation menus. Please read this entire section carefully before operating the panel.

Press ENTER to view Main Menu: Select the desired menu option. Enter your access code if prompted.

NOTE: See Section 6.2.5 for information on how to modify user access code profiles

10.1 User and Installer Default Codes:

Installer Code (factory-programmed as 123456).

Multi-site Installer Code (factory-programmed as 654321).

10.2 Annunciator Description

Figure 10-1 shows the annunciator that is part of the control panel board assembly.

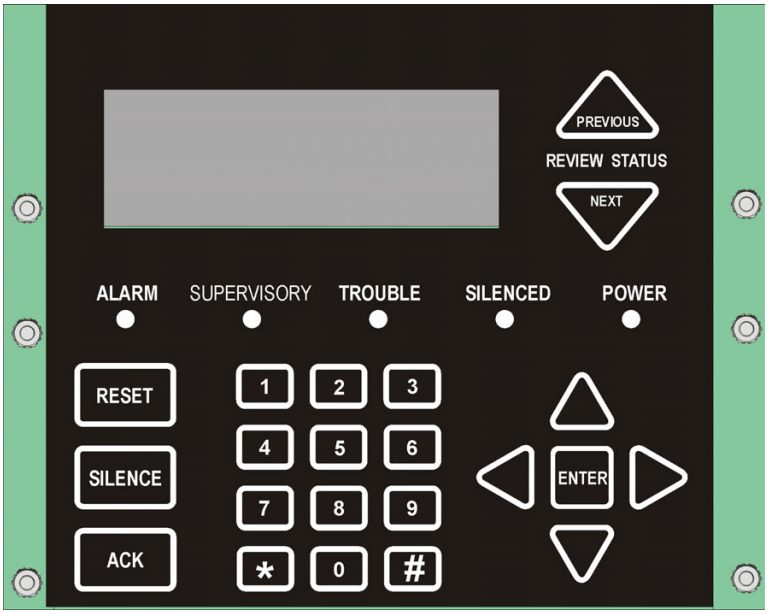

Figure 10.95 Control Panel Annunciator

10.2.1 LCD Display

The control panel LCD displays system messages, annunciates alarms, supervisories and troubles; provides status information; and prompts for input. These messages can be up to 80 characters, displaying over four lines of 20 characters each. Annunciator keys beep when they are pressed.

10.2.2 Banner

The banner is the message that displays on the control panel when the system is in normal mode (no alarm or trouble condition exists and menus are not in use). You can create a customized message that will display instead of the internal (default) message. See Section 9.6.7 for information on customizing the banner.

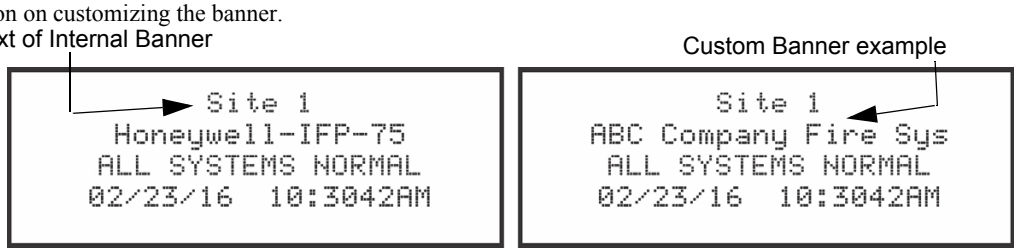

Figure 10.96 Banner Display Examples

10.2.3 Single Key Acknowledge

This feature allows the user to press the ACK and display the oldest un-acknowledged event in the system. Pressing ACK again will acknowledge the event, then display the next oldest un-acknowledged event without pressing the arrow keys.

10.3 Menu System

The control panel is easy to operate from the Main Menu. To view the Main Menu press the ENTER or the right arrow key on the control panel or remote annunciator. The Main Menu will appear as shown in Section 10.3.1. Select the desired option and enter your access code if prompted.

The control panel supports up to 20 access codes. The profile for each access code (or user) can be modified through the programming menu option (see *Section 6.2.5* for access code programming).

10.3.1 Main Menu Overview

The chart below is a brief overview of the Main Menu. These options are described in greater detail throughout this section of the manual.

Main Menu Options	Description
1- System Tests	Access to Fire Drill, Indicator Test, Walk Tests, Communicator Test, Clear History Buffer, Manual AlarmNet Registration and Manual Communicator Reset.
2- Point Functions	From here you can enable / disable points.
3- Event History	Display event history on the LCD. See Section 10.4.4 for more information.
4- Set Time and Date	Set time and date for the system.
5- Network Diagnostics	Ping Panel and Data Network Status
6- Network Programming	Access Learn Network, Edit Network Names, Edit Panel ID, Computer Access, Access Codes, Communicator Options, Sync Network Options.
7- Panel Programming	Brings up a set of menus for programming the panel. These options are described in detail in Section 9.
8- System Information	Menus to view information about the panel such as model, ID, serial number, revision, send or receive firmware updates and feature registration activation.

10.3.2 Using the Menus

To move through the menus:	Use up and down arrows to move through the options in a menu. Use the left arrow to move to a previous menu.
To select an option:	Enter the number of the option, OR press ENTER if the option appears at the top of the menu (= symbol displays after the option number in this case).

10.4 Basic Operation

10.4.1 Setting Time and Date

1. Select 4 for Set Date & Time.
2. Make changes in the fields on the screen. Use right arrow to move through the fields. Use the up or down arrow key to select options in the fields.
3. When the date and time are correct, press ENTER.

10.4.2 Disable / Enable a Point

1. Select 2 for Point Functions.
2. Select 1 for Disable/Enable Point.

Disable / Enable NACs by Template

1. Press 1 for Disable NACs by Template, press 2 to Enable NACs by Template.
2. Use the up or down arrow key to move through the list of templates. Press ENTER to select the current template.

Disable / Enable NACs by Group

1. Press 3 to Disable NACs by Group, or press 4 to Enable NACs by Group.
2. Use the up or down arrow key to move through the list of groups. Press ENTER to select the group highlighted.

Disable / Enable Zone Points

1. Press 5 to Disable Zone Points, or press 6 to Enable Zone Points.
2. Use the up or down arrow key to move through the list of zones. Press ENTER to select the zone highlighted.

Disable / Enable Point

1. Press 7 to Disable /Enable Point.
2. Choose Module.
3. Use the up or down arrow key to choose point and press ENTER.
4. Press right arrow to disable or enable point.

Inhibit Output Group

Inhibiting an output group prevents the group from being utilized by system mapping. While inhibited no event in the system can activate the output group.

1. Press 8 to inhibit output group (OPG).
2. Use the up or down arrow key to select the group to be inhibited.
3. Press right arrow to inhibit the group.
4. Press right arrow again to enable the group.

10.4.3 View Event History

Use the View Event History feature to display events on LCD. From the Main Menu, press 3 to select Event History. Events will begin displaying with most recent events first.

The panel can store up to 1000 events. When it reaches its 1000-event capacity, it will delete the oldest events to make room for the new events as they occur. In networked setups, each panel stores up to 1000 of its own events. When viewing Event History in the panel, the newest 500 events from every panel in the site will be displayed. When using HFSS Honeywell Fire Software Suite, all 1000 events from every panel in the network will be uploaded.

On multi-site displays, pressing ENTER or right arrow brings you directly into View Event History and allows you to view the Event History from every panel in each of the sites that the multi-site display is assigned to.

To clear the event history

From the Installer menu select 1 for System Tests. From the test menu select 6 Clear History Buffer.

10.4.4 Conduct a Fire Drill

1. From the Main Menu, press 1 for System Tests.
2. Press 1 for Fire Drill. You will be prompted to press ENTER.
3. The drill will begin immediately after you press ENTER.
4. Press any key to end the drill. (If you do not press any key to end the fire drill manually, it will time out automatically after ten minutes).

If a fire drill switch has been installed, activating the switch will begin the drill; deactivating the switch will end the drill.

From the main menu select 1 for System Tests. From the test menu select 6 Clear History Buffer.

10.4.5 Conduct an Indicator Test

The indicator test checks the annunciator LEDs, PZT, and LCD display.

1. From the Main Menu, press 1 for System Tests.
2. Press 2 for Indicator Test. The system turns on each LED several times, beeping the PZT as it does so. At the same time it scrolls each available character across the LCD. A problem is indicated if any of the following occurs:

- An LED does not turn on;
- You do not hear a beep;
- All four lines of the LCD are not full.

This test takes approximately 15 seconds to complete. You can press any key to end manually while the test is still in progress. When the test ends, you will be returned to the <Test Menu>.

10.4.6 Conduct a Walk Test

Walk Test is a feature which allows one person to test the fire alarm system. The Walk Test will run for 4 hours or until the user manually exits. If an alarm or pre-alarm condition is occurring in the system, you will not be able to enter the walk test. A walk test may only be initiated if the test is enabled in the user profile.

1. From the Main Menu, press 1 for System Tests.

Caution:

If any alarm verification zones are being used, the user will be asked if they wish to disable alarm verification during walk test. This occurs for either walk test option.

2. Select 3 for Walk Test-No Rpt. Enter the time period you wish the NAC circuit to be active for each alarm (06 to 180 seconds). The LCD will display “WALK TEST STOPPED” on Line 1 and “ENTER = start test” on Line 3. By selecting this option, central station reporting is disabled while the test is in progress.

   Select 4 for Walk Test-with Rpt. Enter the time period you wish the NAC circuit to be active for each alarm (06 to 180 seconds). The LCD will display “WALK TEST STOPPED” on Line 1 and “ENTER = start test” on Line 3. By selecting this option, central station reporting will occur as normal during the walk test.

   The panel generates a TEST report to the central station when the walk test begins. During a walk test, the panel’s normal fire alarm function is completely disabled, placing the panel in a local trouble condition. All zones respond as 1-Count zones (respond when a single detector is in alarm) during a walk test. Each alarm initiated during the walk test will be reported and stored in the event history buffer.
3. To End the Walk test, go to the main menu. Select 1 for System Test, then press 3 or 4. Press ENTER to end the walk test. The system will reset. The panel will send a “TEST RESTORE” report to the central station.

If you do not end the walk test manually within four hours, it will end automatically. If an alarm or pre-alarm condition is occurring in the system, you will not be able to enter the walk test.

NOTE: The panel does not do a full 30 second reset on resettable power outputs. As soon as the device is back to normal, the panel is ready to go to the next device.

10.4.7 Conduct a Communicator Test

1. From the Main Menu, press 1 for System Tests.
2. Select 5 for Communicator Test. The screen will display “Manual communicator test started”. When the test is completed, you will be returned to the <Test Menu>. A manual communicator test requires that at least one daily test in the network be enabled in communicator programming.
3. The Manual communicator test will be communicated out both Phone Lines and Ethernet/Cellular paths if they are all programmed. Each manual communicator test will alternate between one of the Phone Line paths and one of the AlarmNet paths.

10.4.8 Manual AlarmNet Registration

1. From the Main Menu, press 1 for System Tests.
2. Select 8 for Register AlarmNet. The screen will display and ask for confirmation. Feedback will be given if the command was sent or not.

10.4.9 Silence Alarms or Troubles

Press SILENCE and enter your code or rotate the key at the prompt. If an external silence switch has been installed, activating the switch will silence alarms or troubles. If you are already using system menus when you press SILENCE, you will not need to enter your code or rotate the key.

NOTE: Alarm and trouble signals that have been silenced but the detector remains un-restored will un-silence every 4 or 24 hours depending on user selection until it is restored.

NOTE: Multi-Site displays do not allow for silencing multiple sites. Pressing SILENCE will only locally silence the PZT built into the annunciator.

10.4.10 Reset alarms

Press RESET and enter your code or rotate the key at the prompt. If an external reset switch has been installed, activating the switch will reset alarms. If you are already using system menus when you press RESET, you will not need to enter your code or rotate the key.

NOTE: Multi-Site displays do not allow for resetting multiple sites.

Reset Communicator

This options allows the user to Reset the Communicator. The LCD will display:

“Communicator Reset in progress… Please Wait“

You will be returned to the Main Menu when the reset is complete.

The communicator is not allowed to be reset when alarms or supervisories are active. Communicator reset is not allowed if any of the following are active:

- Fire Alarm
- Fire Supervisory
- Fire Pre-Alarm
- CO Alarm
- CO Supervisory

10.4.11 Check Detector Sensitivity Through Point Status

The control panel constantly monitors smoke detectors to ensure that sensitivity levels are in compliance with NFPA 72.

If sensitivity for a detector is not in compliance, the panel goes into trouble, generating a CAL TRBLE condition. A detector enters a CAL MAINT state to indicate that it is approaching an out of compliance condition (but is currently still in compliance).

When a CAL TRBLE condition occurs, the central station receives a detector trouble report (“373” and the zone or point for Contact ID format; “FT” and the zone or point in SIA format).

To check sensitivity for an individual detector, follow the steps below:

1. From the Main Menu, press 2 for Point Functions.
2. Press 2 for Point Status.
3. Select the module where the point you want to check is located.
4. Enter the number of the point you want to check and press ENTER.

5. A screen similar to those shown in Figure 10.97 will display.

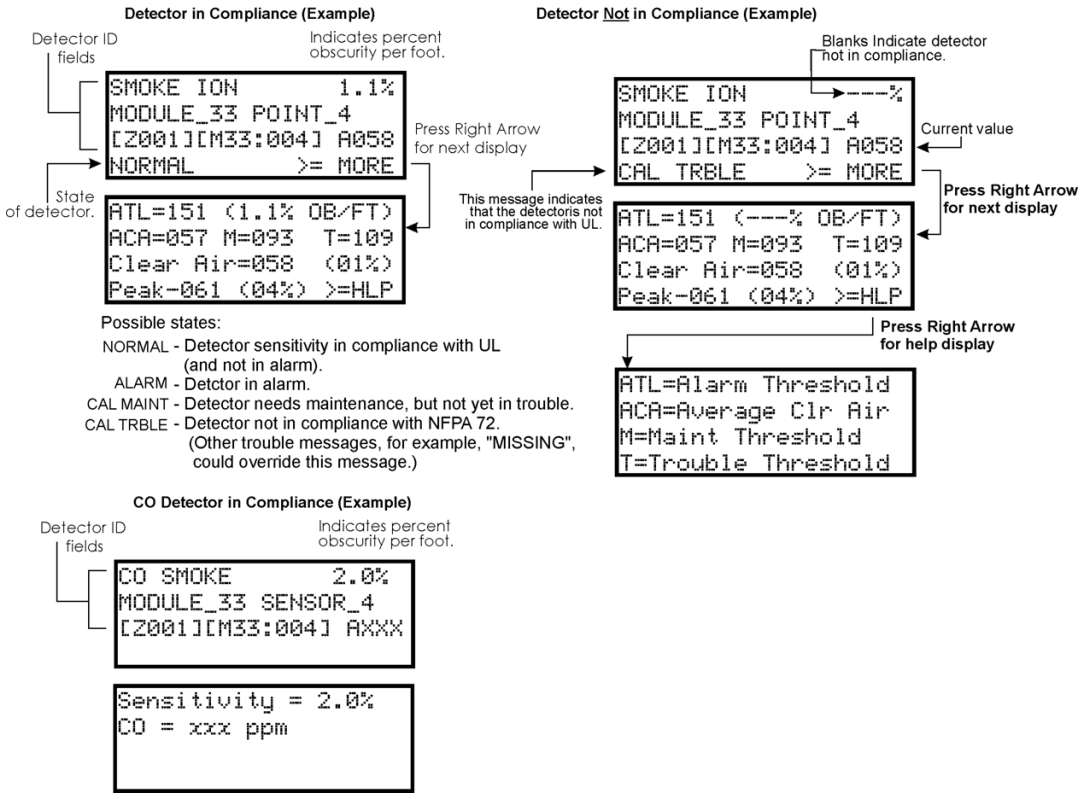

Figure 10.97 Checking Detector Sensitivity Compliance

You can print detector status by uploading the detector status to and printing from HFSS Honeywell Fire Software Suite.

10.4.12 View Status of a Point

1. From the Main Menu, select 2 for Point Status.
2. From the list that displays, press ENTER to select the module where this point is located. The screen that displays will show you if the point has a trouble and will provide sensitivity compliance information. (See Section 10.4.11 for complete information about detector sensitivity compliance.)

10.4.13 View Alarms, Supervisories or Troubles

When the system is in alarm, supervisory or trouble, you can press down to view the location of an alarm, supervisories or trouble.

10.4.14 View System Information

Press 8 from the Main Menu to view the panel model and serial number and system version number and date. Press the left arrow key to return.

■ About Panel

Press 1 to access About Panel to view the panel model, serial number and system version number and date.

■ Send/Receive firmware updates

The IFP-75 has the ability to be updated in the field. The latest IFP-75 Firmware Update Utility can be downloaded from the Farenhyt Web Site. Once a panel has been updated using the Firmware Update Utility, you can use Send/Receive firmware updates to propagate the firmware to the other panels in the network.

1. Press 2 to send a firmware update or press 3 to receive a firmware update from the System Information menu. Available panels are listed in the menu. Note: this feature requires a multi-site installer access code.
2. Use the up or down arrow key to select a panel to send/receive an update to/from. Press ENTER to start the update process.

■ Feature Activation

This menu is used to activate/register additional features.

1. Press 4 from the System Information menu. This will bring up the Feature Activation menu.

2. Press 1 to enter a six digit activation code or press 2 to review features already activated in this panel.

■ Ethernet Info

1. Press 5 from the System Information menu for Ethernet Information.

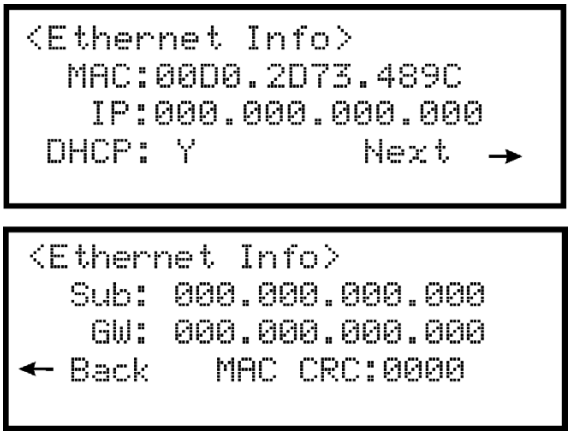

■ AlarmNet Info

1. Press 6 from the System Information menu for AlarmNet Info
2. Cell Strength: 0 to 100%
3. Status: Registered/Not Registered

■ AlarmNet Temp Pin

1. Press 7 from the System Information menu for AlarmNet Temp Pin. This is used in case the FACP is replaced on the CCP.

10.5 Operation Mode Behavior

The control panel can be in one or more of seven conditions at any given moment: Normal, Alarm, Prealarm, Supervisory, Trouble, Silenced, and Reset. Table 10.22 describes the behavior of the panel in each of these modes.

When looking at the LCD, the screen will display FIRE for the “Fire System”, CO for the “CO System”. The highest priority event will display first and include the event count (see Figure 10.99).

Press the down arrow to view the location and type of alarm, supervisory or trouble. If the panel is programmed to Auto Display Event, information describing the highest priority active event will display on the first two lines. The 3 and 4th line will show the status of which event types are active for each system (fire and CO). Auto Display Event activates after two minutes of annunciator inactivity.

Figure 10.98 Highest Priority Event Display

Figure 10.99 This Screen will display when more that 3 event types are active

10.6 Operation Mode Behavior

The control panel can be in one of seven conditions at any given moment: Normal, Alarm, Prealarm, Supervisory, Trouble, Silenced, and Reset. Table 10.22 describes the behavior of the panel in each of these modes.

Operation Mode	Occurs When	System Behavior	In This Mode You Can
Normal	No alarm, supervisories or trouble condition exists and menus are not in use.	SYSTEM POWER LED is on. The All Systems Normal display indicates that the system is in normal mode. 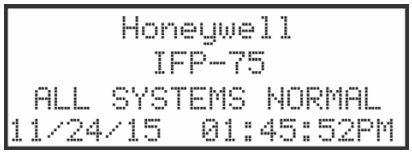 The current date and time display on the last line of the LCD.	Enter the appropriate code, or rotate the key to activate the Main Menu.
Alarm	A smoke detector goes into alarm or a pull station is activated.	The communicator seizes control of the phone line and calls the central station. The on-board annunciator sounds a loud, steady beep (any notification devices attached to the system will also sound). GENERAL ALARM LED flashes. The LCD displays a screen similar to this one. Pressing right or Info will display the location macro, date time stamp, and site/panel number if applicable.	Press the down arrow to view the alarm. A screen similar to this one displays. 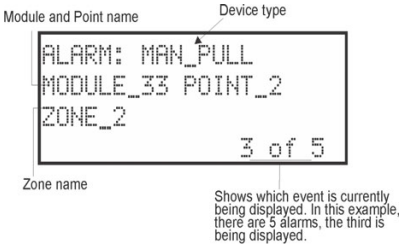 Press SILENCE and enter an access code (or activate the key) to silence the annunciator (and any notification devices attached to the system). When the alarm condition clears, press RESET and enter a code (or activate the key) to restore the panel to normal.
	CO detector goes into alarm.	 Press the down arrow to view the type and location of alarm. (message will alternate with the date/time display).	
	If more than 3 categories are active at a single time screen will display as shown.		

Table 10.22 : Operation Mode Behavior

Operation Mode	Occurs When	System Behavior	In This Mode You Can
Supervisory	The system detects a supervisory condition.	The communicator seizes control of the phone line and calls the central station. The on-board annunciator sounds a loud, pulsing beep in the sequence one second on, one second off. SUPERVISORY LED flashes. The LCD displays a screen similar to this one. FIRE: SUPERVISORY Supervisory Sw SBUS_97 MODULE_2 1 of 1 Info> Pressing right or Info will display the location macro, date time stamp, and site/panel if applicable.	Press down arrow to view the supervisory condition. A screen similar to this one displays. 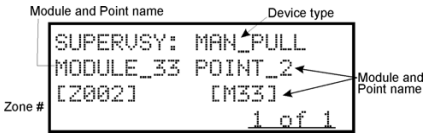 Press SILENCE and enter an access code (or activate the key) to silence the annunciator. Once the supervisory condition has been corrected, the system will restore itself automatically.
	The system detects a supervisory condition with a CO detector	Site 1 CO: SUPR [Press ▽ for status] Press the down arrow to view the type and location of Supervisory. (message will alternate with the date/time display).	
Trouble	A system trouble condition occurs.	The communicator seizes control of the phone line and calls the central station. The on-board annunciator sounds a loud, pulsing beep in the sequence one second on, nine seconds off. SYSTEM TROUBLE LED flashes. The LCD displays a screen similar to this one. FIRE: TROUBLE 1 of 1 Info> Pressing right or Info will display the location macro, date time stamp, and site/panel if applicable.	Press down arrow to view the trouble. A screen similar to this one displays. FIRE: TROUBLE Waterflow Sw SBUS_97 MODULE_1 1 of 1 Info> Pressing the right or Info will display the location macro, date time stamp, and site/panel if applicable. Press SILENCE and enter an access code (or activate the key) to silence the annunciator. Once the trouble condition has been fixed, the system will restore itself automatically.
	A trouble condition with a CO detector	CO: TROUBLE 1 of 1 Info> Pressing right or Info will display the location macro, date time stamp, and site/panel if applicable.	

Table 10.22 : Operation Mode Behavior

Operation Mode	Occurs When	System Behavior	In This Mode You Can
Prealarm	A single detector trips in a 2-Count zone. (2-Count means two detectors must trip before an alarm is reported.)	Touchpad PZT beeps. The LCD displays a screen similar to this one. Pressing right or Info will display the location macro, date time stamp, and site/panel if applicable.	Press down arrow to view the prealarm. A screen similar to this one displays. 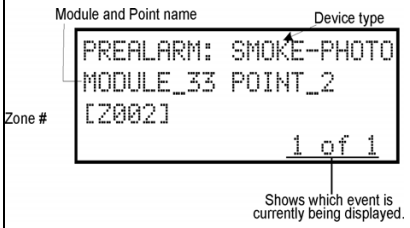 All system operations are available in this mode.
Reset	The RESET button is pressed followed by a valid code or rotation of the key.	All LEDs are on briefly then the LCD displays “ALARM RESET IN PROGRESS”. If the reset process completes normally, the date and time normal mode screen displays.	Menus are not available during the reset process.
Silenced	An alarm or trouble condition has been silenced but still exists. To silence alarms and troubles, press SILENCE followed by the Installer or User Code or rotate the key.	SYSTEM SILENCE LED is on. SYSTEM TROUBLE, SUPERVISORY or GENERAL ALARM LED (depending on condition) is on. The annunciator (and any notification devices attached to the system) will be silenced.	Press down arrow to view the location of the alarm or trouble. When the condition no longer exists, the SYSTEM SILENCED and SYSTEM TROUBLE LED, SUPERVISORY or GENERAL ALARM LEDs turn off.

Table 10.22 : Operation Mode Behavior

10.6.1 Multi-Site Annunciator and Multi-Site User Access

Multi-site Annunciators are unique as they can display the status and event history of all sites they are assigned to. These displays can be especially useful in guard shacks or security centers. A multi-site display is indicated by the words “Multi-Site Display” at the top of the idle screen.

1. The F-Macro key is disabled until a multi-site user access code has been entered and a specific site has been selected.
2. Multi-site Annunciator silencing rules:
   - If any new troubles, supervisory, pre-alarms, or alarms are triggered in any assigned sites, Locally Silenced annunciators will resound.
   - If a multi-site annunciator is locally silenced for 4 or 24 hours depending on user selection, the locally silenced annunciators will resound.
3. The IFP-75 menu system is disabled on a multi-site annunciator. Pressing the Right or Enter keys will bring you straight into event history for assigned sites. To get into the menu system, a multi-site user password must be entered and then a site must be selected from the site selection menu. Once this is done you will have access to the idle screen of that site and the annunciator will temporarily act like a single site annunciator.
4. A multi-site annunciator will sound the highest priority tone from the sites it is assigned to.

NOTE: A multi-site display is created in Module programming in the edit properties menu for an RA-2000, RA-1000 or RA-100 See section Section 9.2.1.

10.7 Releasing Operations

This control panel supports two types of releasing, Double Interlock Zone, and Single Interlock Zone. The Double Interlock Zone operation requires an interlock switch input in the system, and the Single Interlock does not. An interlock switch is typically a dry-contact pressure switch.

NOTE: These releasing functions can only be done if the system has a 5496 intelligent power module included.

When a Single or Double Interlock Zone releasing is selected the system will automatically default the 5496 Intelligent Power Module in the following system parameters:

NOTE: The defaults created can be modified through programming if desired.

- Output Group 2 is created. Output Group 2 will be defaulted as an "Alarm" output group for all releasing zones. NAC [01:001] is assigned to Output Group 2.
- Output Group 3 is created. Output Group 3 will be defaulted as an "Pre-Alert" output group for all releasing zones. NAC [01:002] is assigned to Output Group 3.
- Output Group 4 is created. Output Group 4 will be defaulted as a "Release" output group for all releasing zones. NAC circuit [01:003] is assigned to Output Group 4.

NOTE: The installer must define which input points will be used for detectors, manual release switches, or interlock/pressure switches.

Manufacturer	Part Number	Rating
Asco	T8210A107	24 VDC, 2.5A
	8210G207	24 VDC, 2.5A

Table 10.23 Approved Releasing Solenoids

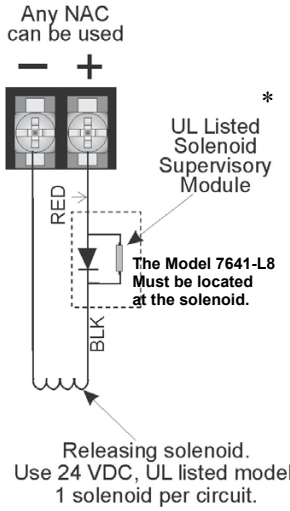

Figure 10.100 Wiring Configuration for Solenoid

10.7.1 Single Interlock Zone Releasing

A single interlock zone utilizes a minimum of two addressable detectors, and a designated manual release switch.

CAUTION:
Only addressable detectors can be used. No conventional detectors can be used. Each Single Interlock Zone input requires at least one manual release switch.

■ Conditions Required for an Pre-Alert Output Activation

If any single addressable detector is activated, the "Pre-Alert" output will activate and the "Pre-Alarm" output will deactivate. This alerts the user that the initial stages required for a release condition are present. (Also refer to Table 10.24.)

■ Conditions required for an General Alarm and Release Output Activation

If two or more addressable detectors, or a manual release switch activate, the “Alarm” and the “Release” outputs will activate. (Also refer to Table 10.24.)

Inputs	Output Results							
1st Addressable Detector		X		X		X		X
2nd Addressable Detector			X	X			X	X
Manual Release Station					X	X	X	X
	Normal	Pre-Alert	Pre-Alert	Release and General Alarm	Release and General Alarm	Release and General Alarm	Release and General Alarm	Release and General Alarm

Table 10.24 : Input Conditions and Output Results

CAUTION:
DETECTORS MUST BE INSTALLED AT 0.7 TIMES THE LINEAR SPACING AS DESCRIBED IN NFPA 72

NOTE: Refer to Table 10.23 for approved releasing solenoids and rating.

10.7.2 Double Interlock Zone Releasing

A Double Interlock Zone uses a minimum of two Addressable detectors, a designated manual release switch, and an interlock switch input. An interlock switch is typically a dry-contact pressure switch and will be referred to as an interlock/pressure switch in this document.

Important!
Only addressable detectors can be used. No conventional detectors can be used.
Each Single Interlock Zone input requires at least one manual release switch.
Each Double Interlock Zone input requires at least one Interlock/pressure switch

■ Conditions Required for a Pre-Alert Output Activation

If any single addressable detector is activated, the “Pre-Alert” output will activate. This alerts the user that the initial stages required for a release condition are present. (Also refer to Table 10.24.)

■ Conditions Required for a General Alarm Output Activation

If two addressable detectors, a manual release switch is activated, or an interlock switch is active, the “Pre-Alert”, and “General Alarm” outputs will activate.

■ Conditions Required for a Release Output Activation

Any release requires the activation of an interlock switch, and either a manual release switch or 2 activated addressable detectors. When these conditions are met, the “Release” and “General Alarm” outputs will activate, and the “Alert” output will deactivate.

Inputs	Output Results															
1st Addressable Detector		X		X		X		X		X		X		X		X
2nd Addressable Detector			X	X			X	X			X	X			X	X
Manual Release Station					X	X	X	X					X	X	X	X
Interlock/Pressure Switch									X	X	X	X	X	X	X	X
	Normal	Pre-Alert	Pre-Alert	Pre-Alert and General Alarm	Pre-Alert and General Alarm	Pre-Alert and General Alarm	Pre-Alert and General Alarm	Pre-Alert and General Alarm	Pre-Alert and General Alarm	Pre-Alert and General Alarm	Pre-Alert and General Alarm	Release and General Alarm	Release and General Alarm	Release and General Alarm	Release and General Alarm	Release and General Alarm

Table 10.25 Double Lock Zone Operation

10.8 Smoke Alarm Verification

Figure 10.101 illustrates how the Smoke Alarm Verification cycle operates.

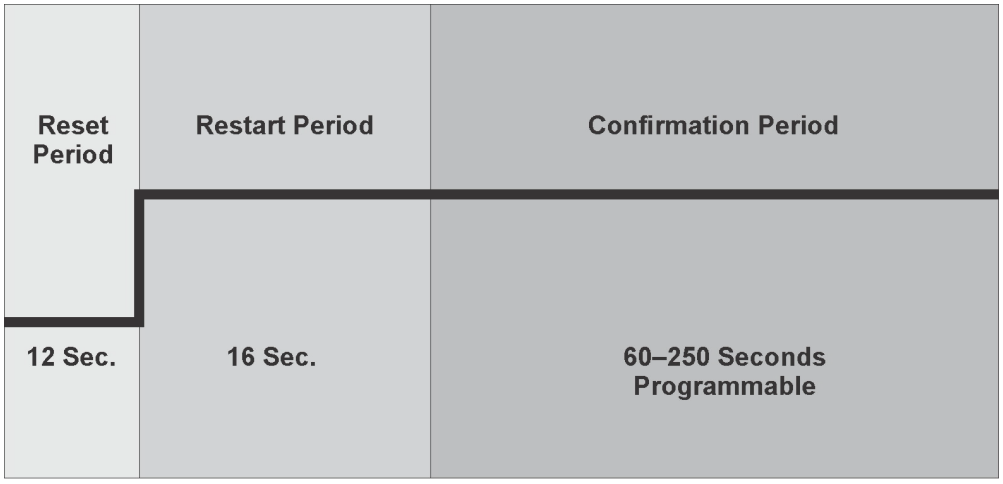

Figure 10.101 Smoke Verification Cycle

During the Confirmation Period if there is no alarm indication then the system will return to normal operation.

10.9 Function Keys

The function keys (on RA-2000 only) IFP-75 have multiple features. Their macro key functionality can simplify the disabling, activating, or inhibiting points or groups respectively. They can also be used as a status type activation event and for activating Map Inhibit. Each F-Key macro can hold 50 events.

■ To access the F-Key Recording menu:

1. From the idle screen, press and hold the F-Key for 5 seconds.
2. Enter a PIN with F-Key macro recording privileges, if prompted.

10.9.1 Recording an F-Key Macro

1. Access the F-Key Recording menu and select the ‘Start F-KEY Recording’ option.
2. The panel will return to the idle screen. Notice the 4th line on the display now alternates with <F# Key Recording>, where # is the number of the F-Key being recorded.

3. Any Disabling or Activating of points, output groups, or templates from the site at this point will be programmed into the macro. Do this by going to any annunciator within the site and entering Main Menu -> Point Functions and use Disable/Enable Point or use I/O Point Control to: disable output groups or individual points, or activate individual points.
4. Once you are finished with disabling or activating points/output groups, enter the F-Key Recording Menu again and select the 'End F-KEY Recording' option.
5. The panel will return to the idle screen.

10.9.2 Aborting an F-Key Macro Recording Session

1. After an F-Key macro recording session has been started, the session can be canceled at any time by accessing the F-Key Recording menu and selecting 'Abort F-KEY Recording' option.
2. The panel will return to the idle screen.

10.9.3 Erasing an F-Key Macro

1. If an F-Key macro has already been recorded, you can erase it by accessing the F-Key Recording menu and selecting the 'Erase F-KEY Macro' option.
2. The panel will return to the idle screen.

10.9.4 Using a Recorded F-Key Macro

1. From the idle screen on any annunciator in the site, press the F-Key you want to activate.
2. Once finished, to de-activate the macro press the F-Key again.

10.9.5 F-Key Status Event

When an F-Key is enabled, it activates its corresponding F-Key Active event. This is a status type event that can activate outputs without showing any status on annunciator displays. This should be used for ancillary purposes only.

10.9.6 F-Key Map Inhibit

The F-Keys have the ability to disable event - output group mapping for the purpose of simulating that the map doesn't exist. This can be setup to allow for testing purposes where notification of an entire building is not desired during the test. This option is programmable for each output group map through HFSS Honeywell Fire Software Suite.

When an F-Key is active and a map in the system is set to be disable by Map Inhibit, the system will show a trouble event indicating it as such.

Section 11: Reporting

This section lists receivers that are compatible with this control panel, and the reporting codes sent by the control panel for SIA and Contact ID formats.

11.1 Receivers Compatible with the Control Panel

Table 11.26 shows receivers compatible with the control panel.

Manufacturer	Model	Format
Silent Knight by Honeywell	Model 9800	SIA and Contact ID
	Model 9000 (SIA formats)	SIA
Honeywell Security	AlarmNet 7810-ir	IP and Cellular Receiver, Contact ID only
Ademco	MX8000	SIA and Contact ID
Ademco	Model 685 (Contact ID)	Contact ID
Sur-Gard	SG-MLR2-DG (V. 1.64 or higher)	SIA and Contact ID
Osborne Hoffman	Quickalert	SIA and Contact ID

Table 11.26 Receivers Compatible with the Control Panel

	SIA Reporting Format				Contact ID Reporting Format			
	SIA pi Modifier			SIA				
Event Description	Module ID # (If Any)	SIA Event Codes	Parameter	Fixed Length Format NN - panel ID XX- SBUS ID ZZZ- Zone # PPPP- Point # GGG- Group # E- Emergency # RRRR-Receiver #	Qualifier	Event Code	Group #	Contact #
System Events	**System Events are reported when either "Report by Point" or Report by Zone is selected**							
AC power low trouble		AT	0	ATNN000000	1	301	00	000
AC power low trouble restore		AR	0	ARNN000000	3	301	00	000
Auto dialer test communications trouble line 1		YC	1	YCNN000001	1	350	Receiver #	001
Auto dialer test communications trouble line 1 restore		YK	1	YKNN000001	3	350	Receiver #	001
Auto dialer test communications trouble line 2		YC	2	YCNN000002	1	350	Receiver #	002
Auto dialer test communications trouble line 2 restore		YK	2	YKNN000002	3	350	Receiver #	002
Automatic test normal		RP	0	RPNN000000	1	602	00	000
Automatic test off normal		RY	0	RYNN000000	1	608	00	000
Battery voltage trouble		YT	Exp. ID	YTNNXX0000	1	302	Exp. ID	000
Battery voltage trouble restore		YR	Exp. ID	YRNNXX0000	3	302	Exp. ID	000
Date changed event		JD	0	JDNN000000	1	625	00	000
ECS Reset		OR	1	ORNN000001	1	401	00	001
Emergency System Overridden		QS	0	QSNN000000	1	244	00	000
Emergency System Overridden Restore		QR	0	QRNN000000	3	244	00	000
Fire drill has begun		FI	0	FINN000000	1	604	00	000
Fire drill has ended		FK	0	FKNN000000	3	604	00	000
F1 Mapping Inhibited		FT	2001	FTNN002001	1	570	00	001
F1 Mapping Inhibited Restoral		FJ	2001	FJNN002001	3	570	00	001
F2 Mapping Inhibited		FT	2002	FTNN002002	1	570	00	002
F2 Mapping Inhibited Restoral		FJ	2002	FJNN002002	3	570	00	002
F3 Mapping Inhibited		FT	2003	FTNN002003	1	570	00	003

Table 11.2 Reporting Formats Table

	SIA Reporting Format				Contact ID Reporting Format			
	SIA pi Modifier			SIA				
Event Description	Module ID # (If Any)	SIA Event Codes	Parameter	Fixed Length Format NN - panel ID XX- SBUS ID ZZZ- Zone # PPPP- Point # GGG- Group # E- Emergency # RRRR-Receiver #	Qualifier	Event Code	Group #	Contact #
F3 Mapping Inhibited Restoral		FJ	2003	FJNN002003	3	570	00	003
F4 Mapping Inhibited		FT	2004	FTNN002004	1	570	00	004
F4 Mapping Inhibited Restoral		FJ	2004	FJNN002004	3	570	00	004
Fire Reset		OR	0	ORNN000000	1	401	00	000
Fire System Overridden		FS	0	FSNN000000	1	245	00	000
Fire System Override Restore		FR	0	FRNN000000	3	245	00	000
Ground fault condition trouble		YP	Exp. ID	YPNNXX0000	1	310	Exp. ID	000
Ground fault condition trouble restore		YQ	Exp. ID	YQNNXX0000	3	310	Exp. ID	000
Initial power up		RR	0	RRNN000000	1	305	00	000
Local programming aborted or ended with errors		LU	0	LUNN000000	1	628	00	000
Local programming begin		LB	0	LBNN000000	1	627	00	000
Local programming ended normally		LS	0	LSNN000000	1	628	00	000
Network node trouble (panel missing)		EM	Panel ID	EMNNNN0000	1	334	Panel ID	000
Network node trouble restore (panel no longer missing)		EN	Panel ID	ENNNNN0000	3	334	Panel ID	000
OPG Inhibit Trouble		FT	Group # + 1000	FTNN001GGG	1	320	00	Group #
OPG Inhibit Trouble Restore		FJ	Group # + 1000	FJNN001GGG	3	320	00	Group #
OPG Inhibit of Releasing Group		SS	Group # + 1000	SSNN001GGG	1	203	00	Group #
OPG Inhibit of Releasing Group Restore		SR	Group # + 1000	SRNN001GGG	3	203	00	Group #
Phone line 1 trouble detected		LT	1	LTNN000001	1	351	00	000
Phone line 1 trouble restore		LR	1	LRNN000001	3	351	00	000
Phone line 2 trouble detected		LT	2	LTNN000002	1	352	00	000
Phone line 2 trouble restore		LR	2	LRNN000002	3	352	00	000
Printer is off-line trouble		VZ	Exp. ID	VZNNXX0000	1	336	Exp. ID	000
Printer is off-line trouble restore		VY	Exp. ID	VYNNXX0000	3	336	Exp. ID	000
Printer is out of paper trouble		VO	Exp. ID	VONNXX0000	1	335	Exp. ID	000
Printer is out of paper trouble restore		VI	Exp. ID	VINNXX0000	3	335	Exp. ID	000
Releasing Notif/Control Circuit Disabled	pi Exp. ID	SS	Point #	SSNNXXPPPP	1	203	Exp. ID	Point #
Releasing Notif/Control Circuit enabled	pi Exp. ID	SR	Point #	SRNNXXPPPP	3	203	Exp. ID	Point #
Remote programming aborted or ended with errors		RU	0	RUNN000000	1	413	00	000
Remote programming ended normally		RS	0	RSNN000000	1	412	00	000
Repeater ground fault trouble		EM	0103	EMNN000103	1	334	Panel ID	103
Repeater ground fault trouble restore		EN	0103	ENNN000103	3	334	Panel ID	103

Table 11.2 Reporting Formats Table

	SIA Reporting Format				Contact ID Reporting Format			
	SIA pi Modifier			SIA				
Event Description	Module ID # (If Any)	SIA Event Codes	Parameter	Fixed Length Format NN - panel ID XX- SBUS ID ZZZ- Zone # PPPP- Point # GGG- Group # E- Emergency # RRRR-Receiver #	Qualifier	Event Code	Group #	Contact #
Repeater missing trouble		EM	0100	EMNN000100	1	334	Panel ID	100
Repeater missing trouble restore		EN	0100	ENNN000100	3	334	Panel ID	100
Repeater Rx1 communication trouble		EM	0101	EMNN000101	1	334	Panel ID	101
Repeater Rx1 communication trouble restore		EN	0101	ENNN000101	3	334	Panel ID	101
Repeater Rx2 communication trouble		EM	0102	EMNN000102	1	334	Panel ID	102
Repeater Rx2 communication trouble restore		EN	0102	ENNN000102	3	334	Panel ID	102
SBUS Class A supervision lost		ET	Exp. ID	ETNNXX0000	1	333	Exp. ID	000
SBUS Class A supervision restore		ER	Exp. ID	ERNNXX0000	3	333	Exp. ID	000
SBUS expander trouble		ET	Exp. ID	ETNNXX0000	1	333	Exp. ID	000
SBUS expander trouble restore		ER	Exp. ID	ERNNXX0000	3	333	Exp. ID	000
SLC class A supervision trouble		ET	Exp. ID	ETNNXX0000	1	331	Exp. ID	000
SLC class A supervision trouble restore		ER	Exp. ID	ERNNXX0000	3	331	Exp. ID	000
SLC programming ended, system active		TE	0	TENN000000	3	607	00	000
SLC programming started, system shut down		TS	0	TSNN000000	1	607	00	000
SLC short circuit trouble		ET	Exp. ID	ETNNXX0000	1	332	Exp. ID	000
SLC short circuit trouble restore		ER	Exp. ID	ERNNXX0000	3	332	Exp. ID	000
Time changed event		JT	0	JTNN000000	1	625	00	000
Unable to report to account trouble		RT	Receiver #	RTNN00RRRR	1	354	00	Receiver #
Unable to report to account trouble restore		YK	Receiver #	YKNN00RRRR	3	354	00	Receiver #
User access code changed		JV	0	JVNN000000	1	602	00	000
User initiated manual dialer test		RX	0	RXNN000000	1	601	00	000
Walk test begin		TS	0	TSNN000000	1	607	00	000
Walk test end		TE	0	TENN000000	3	607	00	000
Zone Events	**Zone events are reported only when "Report by Zone" is selected**							
Auxiliary power trouble		FT	0000	FTNN000000	1	320	00	000
Auxiliary power trouble restore		FJ	0000	FJNN000000	3	320	00	000
CO Detector Alarm		GA	Zone #	GANN000ZZZ	1	162	00	Zone #
CO Detector Alarm Restore		GH	Zone #	GHNN000ZZZ	3	162	00	Zone #
CO Detector Supervisory Alarm		GS	Zone #	GSNN000ZZZ	1	200	00	Zone #
CO Detector Supervisory Alarm Restore		GR	Zone #	GRNN000ZZZ	3	200	00	Zone #
CO Detector Trouble		GT	Zone #	GTNN000ZZZ	1	373	00	Zone #
CO Detector Trouble Restore		GJ	Zone #	GJNN000ZZZ	3	373	00	Zone #
Detector Alarm		FA	Zone #	FANN000ZZZ	1	110	00	Zone #
Detector Alarm Restore		FH	Zone #	FHNN000ZZZ	3	110	00	Zone #
Detector trouble		FT	Zone #	FTNN000ZZZ	1	373	00	Zone #
Detector trouble restore		FJ	Zone #	FJNN000ZZZ	3	373	00	Zone #

Table 11.2 Reporting Formats Table

	SIA Reporting Format				Contact ID Reporting Format			
	SIA pi Modifier			SIA				
Event Description	Module ID # (If Any)	SIA Event Codes	Parameter	Fixed Length Format NN - panel ID XX- SBUS ID ZZZ- Zone # PPPP- Point # GGG- Group # E- Emergency # RRRR-Receiver #	Qualifier	Event Code	Group #	Contact #
ECS Switch Trouble		QT	0	QTNN000000	1	242	00	000
ECS Switch Trouble Restore		QJ	0	QJNN000000	3	242	00	000
ECS Supervisory/Tamper Alarm		QS	0	QSNN000000	1	241	00	000
ECS Supervisory/Tamper Alarm Restore		QR	0	QRNN000000	3	241	00	000
ECS Output Group Trouble		QT	Group # +1000	QTNN001GGG	1	320	00	Group #
ECS Output Group Trouble Restore		QJ	Group # +1000	QJNN001GGG	3	320	00	Group #
External Reset/Silence/Fire Drill switch trouble		UT	0000	UTNN000000	1	373	00	000
External Reset/Silence/Fire Drill switch trouble restore		UJ	0000	UJNN000000	3	373	00	000
LOC Mic Activated ECS Alarm		QA	0	QANN000000	1	220	00	000
LOC Mic Activated ECS Alarm Restore		QH	0	QHNN000000	3	220	00	000
LOC/Point ECS # Alarm		QA	Emergency #	QANN0E0000	1	220 + Emergency #	00	000
LOC/Point ECS # Alarm Restore		QH	Emergency #	QHNN0E0000	3	220 + Emergency #	00	000
Manual pull switch alarm		FA	Zone #	FANN000ZZZ	1	115	00	Zone #
Manual pull switch alarm restore		FH	Zone #	FHNN000ZZZ	3	115	00	Zone #
Manual pull switch trouble		FT	Zone #	FTNN000ZZZ	1	373	00	Zone #
Manual pull switch trouble restore		FJ	Zone #	FJNN000ZZZ	3	373	00	Zone #
Notification output trouble		FT	Group # + 1000	FTNN001GGG	1	320	00	Group #
Notification output trouble restore		FJ	Group # + 1000	FJNN001GGG	3	320	00	Group #
Positive Alarm Sequence acknowledge switch trouble		FT	Zone #	FTNN000ZZZ	1	373	00	Zone #
Positive Alarm Sequence acknowledge switch trouble restore		FJ	Zone #	FJNN000ZZZ	3	373	00	Zone #
SLC LED Module trouble		ET	0000	ETNN000000	1	333	00	000
SLC LED Module trouble restore		ER	0000	ERNN000000	3	333	00	000
Status Point Types Trouble		UT	0	UTNN000000	1	379	00	000
Status Point Types Trouble Restore		UJ	0	UJNN000000	3	379	00	000
Supervisory Detector Alarm		FS	Zone #	FSNN000ZZZ	1	200	00	Zone #
Supervisory Detector Alarm Restore		FR	Zone #	FRNN000ZZZ	3	200	00	Zone #
Supervisory/Tamper Alarm		FS	Zone #	FSNN000ZZZ	1	200	00	Zone #
Supervisory/Tamper alarm condition restore		FR	Zone #	FRNN000ZZZ	3	200	00	Zone #
Supervisory/Tamper switch trouble		FT	Zone #	FTNN000ZZZ	1	373	00	Zone #

Table 11.2 Reporting Formats Table

	SIA Reporting Format				Contact ID Reporting Format			
	SIA pi Modifier			SIA				
Event Description	Module ID # (If Any)	SIA Event Codes	Parameter	Fixed Length Format NN - panel ID XX- SBUS ID ZZZ- Zone # PPPP- Point # GGG- Group # E- Emergency # RRRR-Receiver #	Qualifier	Event Code	Group #	Contact #
Supervisory/Tamper switch trouble restore		FJ	Zone #	FJNN000ZZZ	3	373	00	Zone #
System-based AUX1 switch alarm		UA	1000	UANN001000	1	140	01	000
System-based AUX1 switch alarm restore		UH	1000	UHNN001000	3	140	01	000
System-based AUX1 switch trouble		UT	1000	UTNN001000	1	373	01	000
System-based AUX1 switch trouble restore		UJ	1000	UJNN001000	3	373	01	000
System-based AUX2 switch alarm		UA	2000	UANN002000	1	140	02	000
System-based AUX2 switch alarm restore		UH	2000	UHNN002000	3	140	02	000
System-based AUX2 switch trouble		UT	2000	UTNN002000	1	373	02	000
System-based AUX2 switch trouble restore		UJ	2000	UJNN002000	3	373	02	000
Voice Aux ECS 1 Alarm		UA	3	UANN003000	1	171	00	000
Voice Aux ECS 1 Alarm Restore		UH	3	UHNN003000	3	171	00	000
Voice Aux ECS 2 Alarm		UA	4	UANN004000	1	172	00	000
Voice Aux ECS 2 Alarm Restore		UH	4	UHNN004000	3	172	00	000
Voice Aux ECS 3 Alarm		UA	5	UANN005000	1	173	00	000
Voice Aux ECS 3 Alarm Restore		UH	5	UHNN005000	3	173	00	000
Voice Aux ECS 4 Alarm		UA	6	UANN006000	1	174	00	000
Voice Aux ECS 4 Alarm Restore		UH	6	UHNN006000	3	174	00	000
Water flow switch alarm		SA	Zone #	SANN000ZZZ	1	113	00	Zone #
Water flow switch alarm Restore		SH	Zone #	SHNN000ZZZ	3	113	00	Zone #
Water flow switch trouble		ST	Zone #	STNN000ZZZ	1	373	00	Zone #
Water flow switch trouble Restore		SJ	Zone #	SJNN000ZZZ	3	373	00	Zone #
Zone-based AUX1 switch alarm		UA	Zone # + 1000	UANN001ZZZ	1	140	01	Zone #
Zone-based AUX1 switch alarm restore		UH	Zone # + 1000	UHNN001ZZZ	3	140	01	Zone #
Zone-based AUX1 switch trouble		UT	Zone # + 1000	UTNN001ZZZ	1	373	01	Zone #
Zone-based AUX1 switch trouble restore		UJ	Zone # + 1000	UJNN001ZZZ	3	373	01	Zone #
Zone-based AUX2 switch alarm		UA	Zone # + 2000	UANN002ZZZ	1	140	02	Zone #
Zone-based AUX2 switch alarm restore		UH	Zone # + 2000	UHNN002ZZZ	3	140	02	Zone #
Zone-based AUX2 switch trouble		UT	Zone # + 2000	UTNN002ZZZ	1	373	02	Zone #
Zone-based AUX2 switch trouble restore		UJ	Zone # + 2000	UJNN002ZZZ	3	373	02	Zone #

Table 11.2 Reporting Formats Table

	SIA Reporting Format				Contact ID Reporting Format			
	SIA pi Modifier			SIA				
Event Description	Module ID # (If Any)	SIA Event Codes	Parameter	Fixed Length Format NN - panel ID XX- SBUS ID ZZZ- Zone # PPPP- Point # GGG- Group # E- Emergency # RRRR-Receiver #	Qualifier	Event Code	Group #	Contact #
Point Events: For IDP & SK devices, sensors 1–99 are reported as Points 1–99, modules 1–99 are reported as Points 201–299.								
An unexpected SLC device has been detected	pi Exp. ID	XE	Point #	XENNXXPPPP	1	380	Exp. ID	Point #
An unexpected SLC device has been removed	pi Exp. ID	XI	Point #	XINNXXPPPP	3	380	Exp. ID	Point #
Auxiliary power disabled	pi Exp. ID	FB	Point #	FBNNXXPPPP	1	571	Exp. ID	Point #
Auxiliary power enabled	pi Exp. ID	FU	Point #	FUNNXXPPPP	3	571	Exp. ID	Point #
Auxiliary power Trouble	pi Exp. ID	FT	Point #	FTNNXXPPPP	1	320	Exp. ID	Point #
Auxiliary power trouble restore	pi Exp. ID	FJ	Point #	FJNNXXPPPP	3	320	Exp. ID	Point #
Background Music Switch is Trouble	pi Exp. ID	UT	Point #	UTNNXXPPPP	1	379	Exp. ID	Point #
Background Music Switch is Trouble Restored	pi Exp. ID	UJ	Point #	UJNNXXPPPP	3	379	Exp. ID	Point #
Background Music Switch is Disabled	pi Exp. ID	UB	Point #	UBNNXXPPPP	1	580	Exp. ID	Point #
Background Music Switch is Enabled	pi Exp. ID	UU	Point #	UUNNXXPPPP	3	580	Exp. ID	Point #
CO Detector Trouble	pi Exp. ID	GT	Point #	GTNNXXPPPP	1	373	Exp. ID	Point #
CO Detector Trouble Restore	pi Exp. ID	GJ	Point #	GJNNXXPPPP	3	373	Exp. ID	Point #
CO Detector Disabled	pi Exp. ID	GB	Point #	GBNNXXPPPP	1	571	Exp. ID	Point #
CO Detector Enabled	pi Exp. ID	GU	Point #	GUNNXXPPPP	3	571	Exp. ID	Point #
Detector Alarm	pi Exp. ID	FA	Point #	FANNXXPPPP	1	110	Exp. ID	Point #
Detector Alarm restore	pi Exp. ID	FH	Point #	FHNNXXPPPP	3	110	Exp. ID	Point #
Detector Disabled	pi Exp. ID	FB	Point #	FBNNXXPPPP	1	571	Exp. ID	Point #
Detector Enabled	pi Exp. ID	FU	Point #	FUNNXXPPPP	3	571	Exp. ID	Point #
Detector Trouble	pi Exp. ID	FT	Point #	FTNNXXPPPP	1	373	Exp. ID	Point #
Detector Trouble restore	pi Exp. ID	FJ	Point #	FJNNXXPPPP	3	373	Exp. ID	Point #
Detector CO Alarm	pi Exp. ID	GA	Point #	GANNXXPPPP	1	162	Exp. ID	Point #
Detector CO Alarm Restore	pi Exp. ID	GH	Point #	GHNNXXPPPP	3	162	Exp. ID	Point #
Detector CO Supervisory Alarm	pi Exp. ID	GS	Point #	GSNNXXPPPP	1	200	Exp. ID	Point #
Detector CO Supervisory Alarm Restore	pi Exp. ID	GR	Point #	GRNNXXPPPP	3	200	Exp. ID	Point #
ECS Alarm # Point Alarm	pi Exp. ID	QA	(EPPP) E - Emergency # PPP - Point #	QANNXXEPPP	1	220 + Emergency #	Exp. ID	Point #
ECS Alarm # Point Alarm Restore	pi Exp. ID	QH	(EPPP) E - Emergency # PPP - Point #	QHNNXXEPPP	3	220 + Emergency #	Exp. ID	Point #
ECS Alarm # Point Trouble	pi Exp. ID	QT	Point #	QTNNXXPPPP	1	242	Exp. ID	Point #
ECS Alarm # Point Trouble Restore	pi Exp. ID	QJ	Point #	QJNNXXPPPP	3	242	Exp. ID	Point #
ECS Alarm # Point Disabled	pi Exp. ID	QB	Point #	QBNNXXPPPP	1	243	Exp. ID	Point #
ECS Alarm # Point Enabled	pi Exp. ID	QU	Point #	QUNNXXPPPP	3	243	Exp. ID	Point #

Table 11.2 Reporting Formats Table

	SIA Reporting Format				Contact ID Reporting Format			
	SIA pi Modifier			SIA				
Event Description	Module ID # (If Any)	SIA Event Codes	Parameter	Fixed Length Format NN - panel ID XX- SBUS ID ZZZ- Zone # PPPP- Point # GGG- Group # E- Emergency # RRRR-Receiver #	Qualifier	Event Code	Group #	Contact #
ECS Supervisory/Tamper Alarm	pi Exp. ID	QS	Point #	QSNNXXPPPP	1	241	Exp. ID	Point #
ECS Supervisory/Tamper Alarm Restore	pi Exp. ID	QR	Point #	QRNNXXPPPP	3	241	Exp. ID	Point #
ECS Supervisory/Tamper Trouble	pi Exp. ID	QT	Point #	QTNNXXPPPP	1	242	Exp. ID	Point #
ECS Supervisory/Tamper Trouble Restore	pi Exp. ID	QJ	Point #	QJNNXXPPPP	3	242	Exp. ID	Point #
ECS Supervisory/Tamper Disabled	pi Exp. ID	QB	Point #	QBNNXXPPPP	1	243	Exp. ID	Point #
ECS Supervisory/Tamper Enabled	pi Exp. ID	QU	Point #	QUNNXXPPPP	3	243	Exp. ID	Point #
ECS NAC Trouble	pi Exp. ID	QT	Point #	QTNNXXPPPP	1	320	Exp. ID	Point #
ECS NAC Trouble Restored	pi Exp. ID	QJ	Point #	QJNNXXPPPP	3	320	Exp. ID	Point #
ECS Control Circuit Trouble	pi Exp. ID	QT	Point #	QTNNXXPPPP	1	320	Exp. ID	Point #
ECS Control Circuit Trouble Restored	pi Exp. ID	QJ	Point #	QJNNXXPPPP	3	320	Exp. ID	Point #
ECS Relay Trouble	pi Exp. ID	QT	Point #	QTNNXXPPPP	1	320	Exp. ID	Point #
ECS Relay Trouble Restored	pi Exp. ID	QJ	Point #	QJNNXXPPPP	3	320	Exp. ID	Point #
ECS Notification Trouble	pi Exp. ID	QT	Point #	QTNNXXPPPP	1	320	Exp. ID	Point #
ECS Notification Trouble Restored	pi Exp. ID	QJ	Point #	QJNNXXPPPP	3	320	Exp. ID	Point #
External Reset/Silence/Fire Drill switch disabled	pi Exp. ID	UB	Point #	UBNNXXPPPP	1	571	Exp. ID	Point #
External Reset/Silence/Fire Drill switch enabled	pi Exp. ID	UU	Point #	UUNNXXPPPP	3	571	Exp. ID	Point #
External Reset/Silence/Fire Drill switch trouble	pi Exp. ID	UT	Point #	UTNNXXPPPP	1	373	Exp. ID	Point #
External Reset/Silence/Fire Drill switch trouble restore	pi Exp. ID	UJ	Point #	UJNNXXPPPP	3	373	Exp. ID	Point #
Interlock switch alarm (Water Release Zone)	pi Exp. ID	FA	Point #	FANNXXPPPP	1	110	Exp. ID	Point #
Interlock switch alarm restore (Water Release Zone)	pi Exp. ID	FH	Point #	FHNNXXPPPP	3	110	Exp. ID	Point #
Interlock switch disabled	pi Exp. ID	FB	Point #	FBNNXXPPPP	1	571	Exp. ID	Point #
Interlock switch enabled	pi Exp. ID	FU	Point #	FUNNXXPPPP	3	571	Exp. ID	Point #
Interlock switch trouble (Water Release Zone)	pi Exp. ID	FT	Point #	FTNNXXPPPP	1	373	Exp. ID	Point #
Interlock switch trouble restore (Water Release Zone)	pi Exp. ID	FJ	Point #	FJNNXXPPPP	3	373	Exp. ID	Point #
LOC Mic Activated ECS Alarm	pi Exp. ID	QA	0	QANNXX0000	1	220	Exp. ID	000
LOC Mic Activated ECS Alarm Restore	pi Exp. ID	QH	0	QHNNXX0000	3	220	Exp. ID	000
LOC ECS # Alarm	pi Exp. ID	QA	Emergency #	QANNXXE000	1	220 + Emergency #	Exp. ID	000
LOC ECS # Alarm Restore	pi Exp. ID	QH	Emergency #	QHNNXXE000	3	220 + Emergency #	Exp. ID	000
Manual pull switch alarm	pi Exp. ID	FA	Point #	FANNXXPPPP	1	115	Exp. ID	Point #
Manual pull switch alarm restore	pi Exp. ID	FH	Point #	FHNNXXPPPP	3	115	Exp. ID	Point #
Manual pull switch disabled	pi Exp. ID	FB	Point #	FBNNXXPPPP	1	571	Exp. ID	Point #

Table 11.2 Reporting Formats Table

	SIA Reporting Format				Contact ID Reporting Format			
	SIA pi Modifier			SIA				
Event Description	Module ID # (If Any)	SIA Event Codes	Parameter	Fixed Length Format NN - panel ID XX- SBUS ID ZZZ- Zone # PPPP- Point # GGG- Group # E- Emergency # RRRR-Receiver #	Qualifier	Event Code	Group #	Contact #
Manual pull switch enabled	pi Exp. ID	FU	Point #	FUNNXXPPPP	3	571	Exp. ID	Point #
Manual pull switch trouble	pi Exp. ID	FT	Point #	FTNNXXPPPP	1	373	Exp. ID	Point #
Manual pull switch trouble restore	pi Exp. ID	FJ	Point #	FJNNXXPPPP	3	373	Exp. ID	Point #
Manual release switch alarm (Water Release Zone)	pi Exp. ID	FA	Point #	FANNXXPPPP	1	110	Exp. ID	Point #
Manual release switch alarm restore (Water Release Zone)	pi Exp. ID	FH	Point #	FHNNXXPPPP	3	110	Exp. ID	Point #
Manual release switch disabled	pi Exp. ID	FB	Point #	FBNNXXPPPP	1	571	Exp. ID	Point #
Manual release switch enabled	pi Exp. ID	FU	Point #	FUNNXXPPPP	3	571	Exp. ID	Point #
Manual release switch trouble (Water Release Zone)	pi Exp. ID	FT	Point #	FTNNXXPPPP	1	373	Exp. ID	Point #
Manual release switch trouble restore (Water Release Zone)	pi Exp. ID	FJ	Point #	FJNNXXPPPP	3	373	Exp. ID	Point #
Notification output point disabled	pi Exp. ID	FB	Point #	FBNNXXPPPP	1	571	Exp. ID	Point #
Notification output point enabled	pi Exp. ID	FU	Point #	FUNNXXPPPP	3	571	Exp. ID	Point #
Notification output point trouble	pi Exp. ID	FT	Point #	FTNNXXPPPP	1	320	Exp. ID	Point #
Notification output point trouble restore	pi Exp. ID	FJ	Point #	FJNNXXPPPP	3	320	Exp. ID	Point #
Positive Alarm Sequence acknowledge switch disabled	pi Exp. ID	FB	Point #	FBNNXXPPPP	1	571	Exp. ID	Point #
Positive Alarm Sequence acknowledge switch enabled	pi Exp. ID	FU	Point #	FUNNXXPPPP	3	571	Exp. ID	Point #
Positive Alarm Sequence acknowledge switch trouble	pi Exp. ID	FT	Point #	FTNNXXPPPP	1	373	Exp. ID	Point #
Positive Alarm Sequence acknowledge switch trouble restore	pi Exp. ID	FJ	Point #	FJNNXXPPPP	3	373	Exp. ID	Point #
Status Point Trouble	pi Exp. ID	UT	Point #	UTNNXXPPPP	1	379	Exp. ID	Point #
Status Point Trouble Restored	pi Exp. ID	UJ	Point #	UJNNXXPPPP	3	379	Exp. ID	Point #
Status Point is Disabled	pi Exp. ID	UB	Point #	UBNNXXPPPP	1	580	Exp. ID	Point #
Status Point is Enabled	pi Exp. ID	UU	Point #	UUNNXXPPPP	3	580	Exp. ID	Point #
Supervisory/Tamper Alarm	pi Exp. ID	FS	Point #	FSNNXXPPPP	1	200	Exp. ID	Point #
Supervisory/Tamper Alarm Restore	pi Exp. ID	FR	Point #	FRNNXXPPPP	3	200	Exp. ID	Point #
Supervisory/Tamper point disabled	pi Exp. ID	FB	Point #	FBNNXXPPPP	1	571	Exp. ID	Point #
Supervisory/Tamper point enabled	pi Exp. ID	FU	Point #	FUNNXXPPPP	3	571	Exp. ID	Point #
Supervisory/Tamper point trouble	pi Exp. ID	FT	Point #	FTNNXXPPPP	1	373	Exp. ID	Point #
Supervisory/Tamper point trouble restore	pi Exp. ID	FJ	Point #	FJNNXXPPPP	3	373	Exp. ID	Point #
System-based AUX1 switch alarm	pi Exp. ID	UA	Point #	UANNXXPPPP	1	140	Exp. ID	Point #
System-based AUX1 switch alarm restore	pi Exp. ID	UH	Point #	UHNNXXPPPP	3	140	Exp. ID	Point #
System-based AUX1 switch disabled	pi Exp. ID	UB	Point #	UBNNXXPPPP	1	571	Exp. ID	Point #
System-based AUX1 switch enabled	pi Exp. ID	UU	Point #	UUNNXXPPPP	3	571	Exp. ID	Point #
System-based AUX1 switch trouble	pi Exp. ID	UT	Point #	UTNNXXPPPP	1	373	Exp. ID	Point #

Table 11.2 Reporting Formats Table

	SIA Reporting Format				Contact ID Reporting Format			
	SIA pi Modifier			SIA				
Event Description	Module ID # (If Any)	SIA Event Codes	Parameter	Fixed Length Format NN - panel ID XX- SBUS ID ZZZ- Zone # PPPP- Point # GGG- Group # E- Emergency # RRRR-Receiver #	Qualifier	Event Code	Group #	Contact #
System-based AUX1 switch trouble restore	pi Exp. ID	UJ	Point #	UJNNXXPPPP	3	373	Exp. ID	Point #
System-based AUX2 switch alarm	pi Exp. ID	UA	Point #	UANNXXPPPP	1	140	Exp. ID	Point #
System-based AUX2 switch alarm restore	pi Exp. ID	UH	Point #	UHNNXXPPPP	3	140	Exp. ID	Point #
System-based AUX2 switch disabled	pi Exp. ID	UB	Point #	UBNNXXPPPP	1	571	Exp. ID	Point #
System-based AUX2 switch enabled	pi Exp. ID	UU	Point #	UUNNXXPPPP	3	571	Exp. ID	Point #
System-based AUX2 switch trouble	pi Exp. ID	UT	Point #	UTNNXXPPPP	1	373	Exp. ID	Point #
System-based AUX2 switch trouble restore	pi Exp. ID	UJ	Point #	UJNNXXPPPP	3	373	Exp. ID	Point #
Voice Aux ECS 1 Point Alarm	pi Exp. ID	UA	(3PPP) PPP - Point #	UANNXX3PPP	1	171	Exp. ID	Point #
Voice Aux ECS 1 Point Alarm Restore	pi Exp. ID	UH	(3PPP) PPP - Point #	UHNNXX3PPP	3	171	Exp. ID	Point #
Voice Aux ECS 2 Point Alarm	pi Exp. ID	UA	(4PPP) PPP - Point #	UANNXX4PPP	1	172	Exp. ID	Point #
Voice Aux ECS 2 Point Alarm Restore	pi Exp. ID	UH	(4PPP) PPP - Point #	UHNNXX4PPP	3	172	Exp. ID	Point #
Voice Aux ECS 3 Point Alarm	pi Exp. ID	UA	(5PPP) PPP - Point #	UANNXX5PPP	1	173	Exp. ID	Point #
Voice Aux ECS 3 Point Alarm Restore	pi Exp. ID	UH	(5PPP) PPP - Point #	UHNNXX5PPP	3	173	Exp. ID	Point #
Voice Aux ECS 4 Point Alarm	pi Exp. ID	UA	(6PPP) PPP - Point #	UANNXX6PPP	1	174	Exp. ID	Point #
Voice Aux ECS 4 Point Alarm Restore	pi Exp. ID	UH	(6PPP) PPP - Point #	UHNNXX6PPP	3	174	Exp. ID	Point #
Voice Aux ECS Point Trouble	pi Exp. ID	UT	Point #	UTNNXXPPPP	1	379	Exp. ID	Point #
Voice Aux ECS Point Trouble Restore	pi Exp. ID	UJ	Point #	UJNNXXPPPP	3	379	Exp. ID	Point #
Voice Aux ECS Point Disabled	pi Exp. ID	UB	Point #	UBNNXXPPPP	1	580	Exp. ID	Point #
Voice Aux ECS Point Enabled	pi Exp. ID	UU	Point #	UUNNXXPPPP	3	580	Exp. ID	Point #
Voice Aux Status 1 Switch is Trouble	pi Exp. ID	UT	Point #	UTNNXXPPPP	1	379	Exp. ID	Point #
Voice Aux Status 1 Switch is Trouble Restored	pi Exp. ID	UJ	Point #	UJNNXXPPPP	3	379	Exp. ID	Point #
Voice Aux Status 1 Switch is Disabled	pi Exp. ID	UB	Point #	UBNXXPPPP	1	580	Exp. ID	Point #

Table 11.2 Reporting Formats Table

	SIA Reporting Format				Contact ID Reporting Format			
	SIA pi Modifier			SIA				
Event Description	Module ID # (If Any)	SIA Event Codes	Parameter	Fixed Length Format NN - panel ID XX- SBUS ID ZZZ- Zone # PPPP- Point # GGG- Group # E- Emergency # RRRR-Receiver #	Qualifier	Event Code	Group #	Contact #
Voice Aux Status 1 Switch is Enabled	pi Exp. ID	UU	Point #	UUNXXPPPP	3	580	Exp. ID	Point #
Voice Aux Status 2 Switch is Trouble	pi Exp. ID	UT	Point #	UTNNXXPPPP	1	379	Exp. ID	Point #
Voice Aux Status 2 Switch is Trouble Restored	pi Exp. ID	UJ	Point #	UJNNXXPPPP	3	379	Exp. ID	Point #
Voice Aux Status 2 Switch is Disabled	pi Exp. ID	UB	Point #	UBNNXXPPPP	1	580	Exp. ID	Point #
Voice Aux Status 2 Switch is Enabled	pi Exp. ID	UU	Point #	UUNNXXPPPP	3	580	Exp. ID	Point #
Water flow switch alarm	pi Exp. ID	SA	Point #	SANNXXPPPP	1	113	Exp. ID	Point #
Water flow switch alarm restore	pi Exp. ID	SH	Point #	SHNNXXPPPP	3	113	Exp. ID	Point #
Water flow switch disabled	pi Exp. ID	SB	Point #	SBNNXXPPPP	1	571	Exp. ID	Point #
Water flow switch enabled	pi Exp. ID	SU	Point #	SUNNXXPPPP	3	571	Exp. ID	Point #
Water flow switch trouble	pi Exp. ID	ST	Point #	STNNXXPPPP	1	373	Exp. ID	Point #
Water flow switch trouble restore	pi Exp. ID	SJ	Point #	SJNNXXPPPP	3	373	Exp. ID	Point #
Zone-based AUX1 switch alarm	pi Exp. ID	UA	Point #	UANNXXPPPP	1	140	Exp. ID	Point #
Zone-based AUX1 switch alarm restore	pi Exp. ID	UH	Point #	UHNNXXPPPP	3	140	Exp. ID	Point #
Zone-based AUX1 switch disabled	pi Exp. ID	UB	Point #	UBNNXXPPPP	1	571	Exp. ID	Point #
Zone-based AUX1 switch enabled	pi Exp. ID	UU	Point #	UUNNXXPPPP	3	571	Exp. ID	Point #
Zone-based AUX1 switch trouble	pi Exp. ID	UT	Point #	UTNNXXPPPP	1	373	Exp. ID	Point #
Zone-based AUX1 switch trouble restore	pi Exp. ID	UJ	Point #	UJNNXXPPPP	3	373	Exp. ID	Point #
Zone-based AUX2 switch alarm	pi Exp. ID	UA	Point #	UANNXXPPPP	1	140	Exp. ID	Point #
Zone-based AUX2 switch alarm restore	pi Exp. ID	UH	Point #	UHNNXXPPPP	3	140	Exp. ID	Point #
Zone-based AUX2 switch disabled	pi Exp. ID	UB	Point #	UBNNXXPPPP	1	571	Exp. ID	Point #
Zone-based AUX2 switch enabled	pi Exp. ID	UU	Point #	UUNNXXPPPP	3	571	Exp. ID	Point #
Zone-based AUX2 switch trouble	pi Exp. ID	UT	Point #	UTNNXXPPPP	1	373	Exp. ID	Point #
Zone-based AUX2 switch trouble restore	pi Exp. ID	UJ	Point #	UJNNXXPPPP	3	373	Exp. ID	Point #
System-based Wireless Gateway Trouble	pi Exp. ID	UT	Point #	UTNNXXPPPP	1	373	Exp. ID	Point #
System-based Wireless Gateway Trouble - restore	pi Exp. ID	UJ	Point #	UJNNXXPPPP	3	373	Exp. ID	Point #
Wireless Gateway Trouble	pi Exp. ID	UT	Point #	UTNNXXPPPP	1	373	Exp. ID	Point #
Wireless Gateway Trouble restore	pi Exp. ID	UJ	Point #	UJNNXXPPPP	3	373	Exp. ID	Point #

Table 11.2 Reporting Formats Table

11.2 SIA / IFP-75 Panels PI Modifier Reporting:

Events are sent to the central station as a variable length string:

The event format is:

EEZZZZ

Where:

EE Event code (2 characters)

ZZZZ Event parameter (up to four digits – not zero filled)

1. The account number is sent using an account block that is separate from the event block
2. Multiple events can be sent within a single event block. Events are separated by a "/" character.
3. Event parameter can be either a zone, point or module number.
4. When reporting by point is enabled, the communicator uses a "pi" event to supersedes the actual point event to report the module the point is linked to.
5. Panel ID is not sent in the SIA event parameters.

For Example see Table 11.3:

Event	Report Zone/ Point	Panel ID	Module	Zone ZZZZ	Point ZZZZ	Fields Sent	SIA Event Data
Fire Alarm-Zone	Zone	n/a	n/a97	15	n/a	EE-ZZ	FA15
Fire Alarm-Zone	Zone	n/a	n/a	05	n/a	EE-Z	FA5
Fire Alarm-Point	Point	n/a	01	n/a	123	EE-ZZ /EE-ZZZ	pi01/FA123
Fire Alarm-Point	Point	n/a	33	n/a	203	EE-ZZ /EE-ZZZ	pi11/FA203
Expander Trouble	n/a	n/a	11	n/a	n/a	EE-ZZ	ET11
Auto Test	n/a	n/a	n/a	n/a	n/a	EE-Z	RP0
Battery Trouble-Panel 32	n/a	n/a	98	n/a	n/a	EE-ZZ	YT98
Battery Trouble-Expander 18	n/a	n/a	18	n/a	n/a	EE-ZZ	YT18
SLC Loop Shorted	n/a	n/a	44	n/a	n/a	EE-ZZ	ET44
Program Begin Panel ID=32	n/a	n/a	n/a	n/a	n/a	EE-Z	LB0
Program Begin Panel ID= 22	n/a	n/a	n/a	n/a	n/a	EE-Z	LB0
AC Power Loss - Panel 22	n/a	n/a	98	n/a	n/a	EE-Z	AT0
Fire Trouble	Point	n/a	97	n/a	200	EE-ZZ /EE-ZZZ	pi97/FT200
Fire Trouble	Zone	n/a	97	01	n/a	EE-Z	FT1
Fire Trouble-Nac	Point	n/a	98	n/a	Nac Circuit 7	EE-ZZ /EE-Z	pi98/FT7 Z=Pt. #
Fire Trouble-Nac	Zone	n/a	98	n/a	Nac Circuit 7	EE-ZZZ	FT400 ZZZ=OPG#

Table 11.3 :SIA- IFP-75 Panels - PI Modifier Reporting Examples

11.3 SIA– IFP-75 Panel Communicator:

(Differences/additional features are underlined)

Events are sent to the Central Station Receiver as a fixed length string:

The event format is:

EEPPMMZZZZ

Where

EE Event code (2 characters)

PP Panel number (2 digits – Zero Filled) (valid range from 1 to 64)

MM Module number (2 digits – Zero Filled) (valid range from 1 to 98, typically Module information)

ZZZZ Event parameter (4 digits – Zero Filled) (typically Point, Zone or Circuit information)

1. The Event field will contain 10 digits including the 2 digit event code (EE), 2 digit panel ID (PP), 2 digit Module Number (MM) and a 4 digit Event Parameter (ZZZZ).
2. Based on the actual Event Code, the Module Number or Event Parameter fields might not contain pertinent information. In that case the field will contain zeros.
3. The account number is sent using an account block that is separate from the event block.
4. Multiple events can be sent within a single event block. Events are separated by a "/" character.
5. Event parameter can be a Zone, Point or Circuit Number.

6. "pi" modifier event is not used.
7. Panel can be set to report by either Point or Zone.

For examples see Table 11.4.

Event	Report Zone/ Point	Panel ID PP	Module MM	Zone ZZZZ	Point ZZZZ	Fields Sent	SIA Event Data
Fire Alarm-Zone	Zone	32	n/a	15	n/a	EE-PP-MM-ZZZZ	FA32000015
Fire Alarm-Zone	Zone	32	n/a	05	n/a	EE-PP-MM-ZZZZ	FA32000005
Fire Alarm-Point	Point	32	01	n/a	123	EE-PP-MM-ZZZZ	FA32010123
Fire Alarm-Point	Point	21	33	n/a	203	EE-PP-MM-ZZZZ	FA21330203
Expander Trouble	n/a	15	11	n/a	n/a	EE-PP-MM-ZZZZ	ET15110000
Auto Test	n/a	32	n/a	n/a	n/a	EE-PP-MM-ZZZZ	RP32000000
Battery Trouble-Panel 32	n/a	32	98	n/a	n/a	EE-PP-MM-ZZZZ	YT32980000
Battery Trouble-Expander 18	n/a	32	18	n/a	n/a	EE-PP-MM-ZZZZ	YT32180000
SLC Loop Shorted	n/a	01	44	n/a	n/a	EE-PP-MM-ZZZZ	ET01440000
Program Begin	n/a	32	n/a	n/a	n/a	EE-PP-MM-ZZZZ	LB32000000
Program Begin	n/a	22	n/a	n/a	n/a	EE-PP-MM-ZZZZ	LB22000000
AC Power Loss- Panel 22	n/a	22	98	n/a	n/a	EE-PP-MM-ZZZZ	AT22980000 MM = 00
Fire Trouble	Point	22	97	n/a	200	EE-PP-MM-ZZZZ	FT22970200
Fire Trouble	Zone	22	97	1	n/a	EE-PP-MM-ZZZZ	FT22970001 MM = 00
Fire Trouble-NAC	Point	22	98	n/a	NAC Circuit 7	EE-PP-MM-ZZZZ	FT22980007 ZZZZ=Pt. #
Fire Trouble-NAC	Zone	22	98	n/a	NAC Circuit 7	EE-PP-MM-ZZZZ	FT22980007 ZZZZ=OPG #

Table 11.4 : SIA REPORTING EXAMPLES

Section 12: Testing and Troubleshooting

12.1 Troubleshooting

This section of the manual offers suggestions for troubleshooting hardware problems. Please read this section if you encounter a problem when installing the control panel. If these suggestions do not solve your problem or if you encounter a problem that is not listed here, contact Honeywell Technical Support for assistance.

12.2 Common Problems

Problem	Possible Cause / Suggested Actions
Trouble message “DBL ADDR” (Double Address) displays on LCD.	An address has been assigned to more than one detector. Correct the address following the procedure described in Section 7.7 for SK & IDP devices or Section 7.9 for SD devices.
Auxiliary power or notification circuits have incorrect polarity.	Correct polarity. For notification and auxiliary power circuits: When in alarm or powered, terminals labeled “X” are positive, terminals labeled “O” are negative.
SLC devices are not being recognized (trouble message “Missing” displays).	Check hardware connections. If devices are physically connected, make sure wiring is correct (see Section 7.6). For the main panel, the positive side of device must be connected to terminal 34; the negative side must be connected to Terminal 33. For SLC devices, make sure the device connects to the SLC loop via the SLC OUT terminals.
	Make sure SLC devices have been addressed properly following the procedure described in Section 7. For contact monitor modules, which are addressed using DIP switches, the DIP switch must be set to the correct address before power is applied to the SLC loop. If this procedure is not followed, the device will have an incorrect address.
	Make sure correct polarity has been observed for SLC device wiring. See Section 7.
SLC devices are not being recognized (trouble message “Missing” displays on the annunciator).	Check that SLC loop impedance is within the required range. To measure impedance, use the following procedure. Disconnect both wires from the terminal block at the panel (SLC devices can remain connected). Measure the impedance from positive to negative and from negative to positive. Both measurements should be greater than 500 K ohms. If the installation uses T-taps, test each T-tap individually. Temporarily connect the positive wire to the negative wire of the SLC loop at the point farthest from the panel (SLC devices can remain connected). Measure the impedance from positive to negative and from negative to positive. Both measurements must be less than 50 ohms.
5496 module that has been physically connected to the panel but is not being recognized.	Check the status of the 5496 green LED. If it flashes in the pattern .5 sec. on / .5 sec. off, it is likely that the 5496 has not been added to the system through programming. JumpStart® will add any 5496s connected to the panel. If you have already run JumpStart®, 5496s can be added manually (see Section 9.2.2). Check that the correct ID for the 5496 module has been set through the DIP switches. Assign ID#1 to the first 5496 and ID#2 to the second 5496. See Section 4.11.1 for complete details. If the wiring between the 5496 and the panel is correct, measure the voltage from 5496 Terminal (+) to Terminal (-). Voltage should be in the range 27.2-27.4V when AC power is present. If the green LED is not flashing, the likely cause is incorrect wiring from between the 5496 and the panel. See Section 4.4 for wiring details.

12.2.1 Periodic Testing And Maintenance

To ensure proper and reliable operation, it is recommended that system inspection and testing be scheduled monthly or as required by national and/or local fire codes. Testing should be done by a qualified services representative if a malfunction is encountered.

Before testing:

1. Notify the fire department and/or central alarm receiving station if an alarm condition is transmitted.
2. Notify facility personnel of a test so that alarm sounding devices are ignored during the test period.
3. When necessary, activation of Notification Appliances can be prevented by the DISABLE function

Testing:

1. Activate a input via an alarm initiating device and check that the correct outputs activate (Notification Appliances sound/flash, relays activate, alarm LED lights). Reset system. Repeat for each alarm initiating device.
2. Momentarily open the following circuits one at a time and check for a trouble signal:
   - Notification Appliance (bell) Circuits.
   - Initiating devices
3. If new batteries were installed, wait 48 hours before completing this step. Remove AC power, activate initiating device and check that:
   - the ALARM indicator lights.
   - all active Notification Appliances sound.

Measure battery voltage while the Notification Appliances are sounding. Replace any battery with terminal voltage less than 85% of rating. Reapply AC power and RESET system.

12.2.2 Event History

The event history can be useful for tracking or recalling a trouble condition.

12.3 Built-in Troubleshooting and Testing Tools

The fire control panel has several built-in testing and troubleshooting tools that can be utilized to save time while testing and troubleshooting points and SLC devices.

12.3.1 SLC Device Locator

SLC device locator can be used to locate a device on a SLC loop.

Follow these steps to locate a particular SLC device:

1. Select 2 (Point Functions) from the Main Menu.
2. Select 4 (SLC Dev Locator).
   A message similar to the one shown in Figure 12.102 will display.

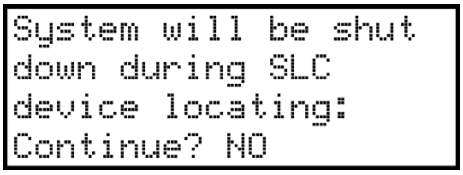

Figure 12.102 Shut Down Warning

3. Press the up or down arrow to toggle NO to YES then press ENTER.
   If NO is chosen you will exit back to the Point Function menu.
   If Yes is chosen the system will cease normal operation leaving the premise unprotected.
4. Select the SLC loop.
5. Enter the SLC address of the device you wish to locate.
   The LED on the selected device will start flashing.
6. Press left arrow to exit SLC device locator function.

NOTE: Once you exit the system will resume normal operation.

12.3.2 SLC Multi Locator

This feature is the same as SLC Device Locator, except you can locate up to 8 devices on a single search.

Follow these instructions to locate multiple SLC devices:

1. Select 2 (Point Functions) from the Main Menu.
2. Select 5 (SLC Multi Locator).
   A message similar to the one shown in Figure 12.102 will display.

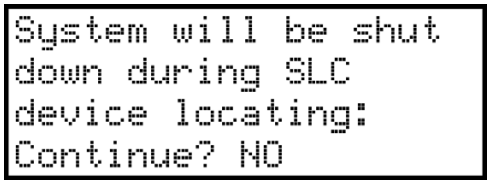

Figure 12.103 Shut Down Warning

3. Press the up or down arrow to toggle NO to YES then press ENTER.
   If NO is chosen you will exit back to the Point Function menu.
   If Yes is chosen the system will cease normal operation leaving the premise unprotected.
4. Select the SLC loop.
5. Enter up to 8 SLC addresses for the devices you wish to locate.
   The LEDs on the selected devices will start flashing.
6. Press the left arrow key to exit SLC multi-locater function.

12.3.3 I/O Point Control

NOTE: Once you exit the system will resume normal operation.

This feature allows you to toggle any output on or off and trip any input device. This can be useful to test a point's output mapping.

Follow these steps to control a I/O point:

1. Select 2 (Point Functions) from the Main Menu.
2. Select 6 (I/O Point Control).
3. Select the Module the point is on.
4. Enter the point number, or press the up or down arrow to select the point you wish to test, then press ENTER.
5. Press ENTER to generate an alarm for an input point or activate an output point.
6. To exit press the left arrow key.

12.4 Earth Fault Resistance

Table 12.5 lists the earth fault resistance detection for each applicable terminal on the FACP.

TERMINAL	LOW BIASED		HIGH BIASED	
(values in kohms)	high trip	high restore	low trip	low restore
NAC 1 -	0	0		
NAC 1 +			0	0
NAC 2 -	0	0		
NAC 2 +			0	0
SBUS -			0	0
SBUS +	0	0		
SBUS A			0	0
SBUS B			0	0
SLC IN -			0	0
SLC IN +	0	0		
SLC OUT -			0	0
SLC OUT +	0	0		

Table 12.5 Earth Faults in Ohms

Section 13: Installation Records

This section of the manual is for you to use if you wish to track of how points, zones, and groups have been programmed.

13.1 SD SLC Device Point Record

You can use Table 13.6 to keep track of SD SLC device points. Default addresses for ID:On-board: = 97

Module	Addr	Zone / Group	Description	Module	Addr	Zone/ Group	Description
On-board	1			On-board	33		
On-board	2			On-board	34		
On-board	3			On-board	35		
On-board	4			On-board	36		
On-board	5			On-board	37		
On-board	6			On-board	38		
On-board	7			On-board	39		
On-board	8			On-board	40		
On-board	9			On-board	41		
On-board	10			On-board	42		
On-board	11			On-board	43		
On-board	12			On-board	44		
On-board	13			On-board	45		
On-board	14			On-board	46		
On-board	15			On-board	47		
On-board	16			On-board	48		
On-board	17			On-board	49		
On-board	18			On-board	50		
On-board	19						
On-board	20						
On-board	21						
On-board	22						
On-board	23						
On-board	24						
On-board	25						
On-board	26						
On-board	27						
On-board	28						
On-board	29						
On-board	30						
On-board	31						
On-board	32						

Table 13.6 : SD Installation Record

13.2 IDP/SK SLC Device Point Record

You can use Table 13.7 to keep track of IDP/SK SLC detectors and modules.

Default addresses for ID: On-board: = 97

Detector	Addr	Zone / Group	Description	Detector	Addr	Zone/ Group	Description
On-board	1			On-board	39		
On-board	2			On-board	40		
On-board	3			On-board	41		
On-board	4			On-board	42		
On-board	5			On-board	43		
On-board	6			On-board	44		
On-board	7			On-board	45		
On-board	8			On-board	46		

Table 13.7 : IDP/SK Detector Installation Record

Detector	Addr	Zone / Group	Description	Detector	Addr	Zone/ Group	Description
On-board	9			On-board	47		
On-board	10			On-board	48		
On-board	11			On-board	49		
On-board	12			On-board	50		
On-board	13			On-board	52		
On-board	14			On-board	53		
On-board	15			On-board	54		
On-board	16			On-board	55		
On-board	17			On-board	56		
On-board	18			On-board	57		
On-board	19			On-board	58		
On-board	20			On-board	59		
On-board	21			On-board	60		
On-board	22			On-board	61		
On-board	23			On-board	62		
On-board	24			On-board	63		
On-board	25			On-board	64		
On-board	26			On-board	65		
On-board	27			On-board	66		
On-board	28			On-board	67		
On-board	29			On-board	68		
On-board	30			On-board	69		
On-board	31			On-board	70		
On-board	32			On-board	71		
On-board	33			On-board	72		
On-board	34			On-board	73		
On-board	35			On-board	74		
On-board	36			On-board	75		
On-board	37						
On-board	38						

Table 13.7 : IDP/SK Detector Installation Record

Appendix A: Compatible Devices

A.1 Notification Appliances

For proper operation, you must use polarized devices with a 4.7k ohm EOL resistor on each loop. All supervised notification appliances used with the control panel must be polarized.

NOTE: Not all devices can use the Sync feature, be sure to check table below to ensure the device you have chosen will work with this feature. This control is UL listed for panel wide Synchronization.

Table below lists notification appliances compatible with the fire alarm control panel. Appliances which can be synchronized indicate the type of SYNC available in the columns marked Audio and Visual.

Manufacturer	Model	Audio	Visual	Type
AMSECO	SH24W-153075	x	x	Horn/Strobe
	SAD24-153075		x	Strobe
	SAD24-75110		x	Strobe
	SL24W-75110		x	Strobe
	SL24C-3075110		x	Strobe
	SLB24-75		x	Strobe
	RSD24-153075		x	Strobe
	RSD24-75110		x	Strobe
	SH24W-75110	x	x	Horn/Strobe
	SH24W-3075110	x	x	Horn/Strobe
	SHB24-75	x	x	Horn/Strobe
	SCM24W-153075	x		Chimes/Strobe
	SCM24W-75110	x		Chimes/Strobe
	SCM24C-3075110	x		Chimes/Strobe
	SCM24C-177	x		Chimes/Strobe
	H24W	x		Horn
	H24R	x		Horn
FCI	S2415-FC		x	Strobe
	S241575-FC		x	Strobe
	S2430-FC		x	Strobe
	130-3117C	x		Mini Horn
	130-3147C	x		Mini Horn
	BLV-6	x		Vibrating Bell
	BLV-10	x		Vibrating Bell
	BLVCH	x		Vibrating Chime
	H12/24-FC	x		Horn
	H12/24W-FC	x		Horn
	H12/24K-FC	x		Horn
	HC12/24-FC	x		Horn

Table A.8 Compatible Notification Appliances

Manufacturer	Model	Audio	Visual	Type
FCI (cont.)	HC12/24W-FC	x		Horn
	HC12/24K-FC	x		Horn
	P2415-FC	x	x	Horn/Strobe
	P2415W-FC	x	x	Horn/Strobe
	P2415K-FC	x	x	Horn/Strobe
	P241575-FC	x	x	Horn/Strobe
	P241575W-FC	x	x	Horn/Strobe
	P241575F-FC	x	x	Horn/Strobe
	P241575K-FC	x	x	Horn/Strobe
	P2430-FC	x	x	Horn/Strobe
	P2430W-FC	x	x	Horn/Strobe
	P2430K-FC	x	x	Horn/Strobe
	P2475-FC	x	x	Horn/Strobe
	P2475W-FC	x	x	Horn/Strobe
	P2475K-FC	x	x	Horn/Strobe
	P24110-FC	x	x	Horn/Strobe
	P24110W-FC	x	x	Horn/Strobe
	P24110K-FC	x	x	Horn/Strobe
	S2430W-FC		x	Strobe
	S2430K-FC		x	Strobe
	S2475-FC		x	Strobe
	S2475W-FC		x	Strobe
	S2475K-FC		x	Strobe
	S24110-FC		x	Strobe
	S24110W-FC		x	Strobe
	S24110K-FC		x	Strobe
Federal Signal	450	x		Horn
	VALS	x	x	Horn/Strobe

Table A.8 Compatible Notification Appliances

Manufacturer	Model	Audio	Visual	Type
Gentex	GEC-24-15	x	x	Horn/Strobe
	GEC-24-30	x	x	Horn/Strobe
	GEC-24-60	x	x	Horn/Strobe
	GEC-24-75	x	x	Horn/Strobe
	GEC-24-177	x	x	Horn/Strobe
	GEC-24-110	x	x	Horn/Strobe
	GEC-24-15/75	x	x	Horn/Strobe
	GX91	x		MiniHorn Steady Tone
	GX93	x		MiniHorn Temporal Tone
	HG124	x		Horn
	HS24-15	x	x	Horn/Strobe
	HS24-30	x	x	Horn/Strobe
	HS24-60	x	x	Horn/Strobe
	HS24-75	x	x	Horn/Strobe
	HS24-110	x	x	Horn/Strobe
	HS24-1575	x	x	Horn/Strobe
	GCC24	x	x	Multi Candella Horn/Strobe Ceiling Mount
	GCCR24		x	Multi Candella Horn/Strobe Ceiling Mount
	GCS24		x	Multi Candella Strobe Ceiling Mount
	GCSR24		x	Multi Candella Strobe Ceiling Mount
	GECR-24	x	x	Multi Candella Horn/Strobe
	GES24-15		x	Strobe
	GES24-30		x	Strobe
	GES24-60		x	Strobe
	GES24-75		x	Strobe
	GES24-110		x	Strobe
	GES24-15/75		x	Strobe
	GES24-177		x	Strobe
	GES3-24		x	Multi Candella Strobe
	GESR-24		x	Multi Candella Strobe
	GEH-24	x		Horn
	ST24-30		x	Strobe
	ST24-60		x	Strobe
	ST24-75		x	Strobe
	ST24-110		x	Strobe
Gentex (cont.)	ST24-1575		x	Strobe
	WGEC24-75W	x	x	Weatherproof Horn/Strobe
	WGES24-75W		x	Weatherproof Strobe
	WGMS-24-X	x	x	Horn/Strobe

Table A.8 Compatible Notification Appliances

Manufacturer	Model	Audio	Visual	Type
System Sensor	CHR	x		Chime
	CHW	x		Chime
	CHSR	x	x	2-Wire Chime/Strobe
	CHSW	x	x	2-Wire Chime/Strobe
	HR	x	x	Horn
	HW		x	Horn
	HRK		x	Horn
	HWL		x	Horn WHT Wall 4x4
	HRL		x	Horn Red Wall 4x4
	HGRL		x	Horn Red Wall 2x4
	HGWL		x	Horn WHT Wall 2x4
	CHWL	x		Chime WHT Wall 4x4
	CHRL	x		Chime Red Wall 4x4
	CHSRL	x	x	Chime/Strobe Red Wall 4x4
	CHSWL	x	x	Chime/Strobe WHT Wall 4x4
	CHSCRL	x	x	Chime/Strobe Red Ceil 4x4
	CHSCWL	x	x	Chime/Strobe WHT Ceil 4x4
	P2R	x	x	2-Wire Horn/Strobe
	P2R-P	x	x	2-Wire Horn/Strobe
	PC2R	x	x	2-Wire Horn/Strobe
	PC2R-P	x	x	2-Wire Horn/Strobe
	P2RH	x	x	2-Wire Horn/Strobe High Candela
	P2RH-P	x	x	2-Wire Horn/Strobe High Candela
	PC2RH	x	x	2-Wire Horn/Strobe High Candela
	PC2RH-P	x	x	2-Wire Horn/Strobe High Candela
	P2W	x	x	2-Wire Horn/Strobe
	P2W-P	x	x	2-Wire Horn/Strobe
	PC2W	x	x	2-Wire Horn/Strobe
	PC2W-P	x	x	2-Wire Horn/Strobe
	P2WH	x	x	2-Wire Horn/Strobe High Candela
	P2WH-P	x	x	2-Wire Horn/Strobe High Candela
	PC2WH	x	x	2-Wire Horn/Strobe High Candela
	PC2WH-P	x	x	2-Wire Horn/Strobe High Candela
	P2RK	x	x	2-Wire Horn/Strobe
	PC2RK	x	x	2-Wire Horn/Strobe
	P2RHK	x	x	2-Wire Horn/Strobe High Candela
	PC2RHK	x	x	2-Wire Horn/Strobe High Candela
	P4R	x	x	4-Wire Horn/Strobe
	PC4R	x	x	4-Wire Horn/Strobe
	P4RH	x	x	4-Wire Horn/Strobe High Candela

Table A.8 Compatible Notification Appliances

Manufacturer	Model	Audio	Visual	Type
System Sensor (cont.)	P4W	x	x	4-Wire Horn/Strobe
	PC4W	x	x	4-Wire Horn/Strobe
	P4WH	x	x	4-Wire Horn/Strobe High Candela
	PC4WH	x	x	4-Wire Horn/Strobe High Candela
	P4RK	x	x	4-Wire Horn/Strobe
	PC4RK	x	x	4-Wire Horn/Strobe
	P4RHK	x	x	4-Wire Horn/Strobe High Candela
	PC4RHK	x	x	4-Wire Horn/Strobe High Candela
	PC4RH	x	x	4-Wire Horn/Strobe High Candela
	P2RL, P2RL-P, P2RL-SP*	x	x	Horn/Strobe 2W Red Wall 4x4
	P2WL, P2WL-P, P2WL-SP*	x	x	Horn/Strobe 2W WHT Wall 4x4
	PC2RL	x	x	Horn/Strobe 2W Red Ceil 4x4
	PC2WL	x	x	Horn/Strobe 2W WHT Ceil 4x4
	P2GRL	x	x	Horn/Strobe 2W Red Wall 2x4
	P2GWL	x	x	Horn/Strobe 2W WHT Wall 2x4
	P4RL	x	x	Horn/Strobe 4W Red Wall 4X4
	P4WL	x	x	Horn/Strobe 4W WHT Wall 4X4
	PC4RL	x	x	Horn/Strobe 4W Red Ceil 4X4
	PC4WL	x	x	Horn/Strobe 4W WHT Ceil 4X4
	SR		x	Strobe
	SR-P		x	Strobe
	SCR		x	Strobe
	SCR-P		x	Strobe
	SRH		x	Strobe High Candela
	SRH-P		x	Strobe High Candela
	SCRH		x	Strobe High Candela
	SCRH-P		x	Strobe High Candela
	SW		x	Strobe
	SW-P		x	Strobe
	SCW		x	Strobe
	SCW-P		x	Strobe
	SWH		x	Strobe High Candela
	SWH-P		x	Strobe High Candela
	SCWH		x	Strobe High Candela
	SCWH-P		x	Strobe High Candela
	SRK		x	Strobe
	SCRK		x	Strobe
	SRHK		x	Strobe High Candela
	SCRHK		x	Strobe High Candela
	SRL, SRL-P, SRL-SP*		x	Strobe Red Wall 4x4
	SWL, SWL-P, SWL-ALERT SWL-CLR-ALERT*		x	Strobe White Wall 4x4
	SCRL		x	Strobe Red Ceil 4x4
	SCWL		x	Strobe White Ceil 4x4
	SCWL-CLR-ALERT		x	Strobe WHT Ceil CLR Lens 4x4
	SGRL		x	Strobe Red Wall 2x4
	SGWL		x	Strobe White Wall 2x4
	P2RH-LF	x	x	2-Wire Low Frequency Sounder Strobe
	P2WH-LF	x	x	2-Wire Low Frequency Sounder Strobe
	HR-LF	x		Low Frequency Sounder

Table A.8 Compatible Notification Appliances

Manufacturer	Model	Audio	Visual	Type
System Sensor (cont.)	HW-LF	x		Low Frequency Sounder
	SEP-SPSWL**			Universal Expander Plate, Amber Lens, White, ALERT
	SEP-SPSWL-P**			Universal Expander Plate, White, Plain
	SEP-BBSWL**			Universal Expander Plate Back Box Skirt, White
* P=Plain, ALERT=Pad Printing ALERT, SP=Fuego				
** Expander plates are for vertical wall mounting only. Indoor applications. Must be mounted in the correct orientation. “UP” is indicated on the part to designate the top of the plate				
Wheelock	AH-12	x		Horn
	AH-24	x		Horn
	AH-12WP	x		Horn Weatherproof
	AH-24WP	x		Horn Weatherproof
	AMT-241575W	x	x	Multi-Tone Horn Strobe
	AMT-24MCW		x	Mutli-Tone Horn Strobe
	AMT-241575W-NYC	x	x	Multi-Tone Horn Strobe
	AMT-12/24	x		Multi-tone Horn
	AMT-12/24 NYC	x		Multi-tone Horn
	AS-121575W		x	Horn/Strobe
	NH-12/24	x	x	Horn
	AS-241575W	x	x	Horn/Strobe
	AS-24MCC	x	x	Horn/Strobe
	AS-24MCCH	x	x	Horn/Strobe
	AS-24MCW	x	x	Horn/Strobe
	AS-24MCWH	x	x	Horn/Strobe
	ASWP-2475W	x	x	Horn/Strobe Weatherproof
	ASWP-2475C	x	x	Horn/Strobe Weatherproof
	ASWP-24MCWH	x	x	Horn/Strobe
	ASWP-24MCCH	x	x	Horn/Strobe
	CH-70	x		Chime
	CH-90	x		Chime
	CH70-241575W		x	Chime/Strobe
	CH70-24MCW		x	Chime/Strobe
	CH70-24MCWH		x	Chime/Strobe
	CH90-24MCC		x	Chime/Strobe
	CH90-24MCCH		x	Chime/Strobe

Table A.8 Compatible Notification Appliances

Manufacturer	Model	Audio	Visual	Type
	HS-24	x		Horn
	HS4-241575W	x	x	Horn/Strobe
	HS4-24MCW	x	x	Horn/Strobe
	HS4-24MCWH	x	x	Horn/Strobe
	HS4-24MCC	x	x	Horn/Strobe
	MIZ-24S	x	x	Mini Horn Strobe
	MT-121575W		x	MultitoneHorn Strobe
	MT-241575W	x	x	Multitone Horn Strobe
	MT-24MCW		x	Multitone Horn Strobe
	MTWP-2475W		x	Multitone Horn Strobe
	MTWP-2475C		x	Multitone Horn Strobe
	MTG-121575W	x	x	Multitone Horn Strobe
	MTR-121575W	x	x	Multitone Horn Strobe
	MTWPA-2475W	x	x	Multitone Horn Strobe
	MTWPB-2475W	x	x	Multitone Horn Strobe
	MTWPG-2475W	x	x	Multitone Horn Strobe
	MTWPR-2475W	x	x	Multitone Horn Strobe
	MTWPA-24MCCH	x	x	Multitone Horn Strobe
	ZNH	x		Horn
Wheelock	NS-121575W	x	x	Horn/Strobe
(cont.)	NS-241575W	x	x	Horn/Strobe
	NS-24MCW	x	x	Horn/Strobe
	NS-24MCC	x	x	Horn/Strobe
	NS-24MCCH	x	x	Horn/Strobe
	ZNS-MCW	x	x	Horn/Strobe
	ZNS-MCWH	x	x	Horn/Strobe
	ZNS-24MCC	x	x	Horn/Strobe
	ZNS-24MCCH	x	x	Horn/Strobe
	RSS-121575W		x	Strobe
	RSS-241575W		x	Strobe
	RSS-24MCC		x	Strobe
	RSS-24MCCR		x	Strobe
	RSS-24MCCH		x	Strobe
	RSS-24MCCHR		x	Strobe
	RSS-24MCW		x	Strobe
	RSS-24MCWH		x	Strobe
	RSSP-121575W		x	Strobe
	RSSP-241575W		x	Strobe
	RSSR-2415W		x	Strobe
	RSSR-2415C		x	Strobe

Table A.8 Compatible Notification Appliances

Manufacturer	Model	Audio	Visual	Type
Wheelock (cont.)	RSSR-2475W		x	Strobe
	RSSR-2475C		x	Strobe
	RSSR-24110C		x	Strobe
	RSSA-24110W		x	Strobe
	RSSB-24110W		x	Strobe
	RSSG-24110W		x	Strobe
	RSSR-24110W		x	Strobe
	RSSA-24MCC		x	Multi-Cd Strobe
	RSSB-24MCC		x	Multi-Cd Strobe
	RSSG-24MCC		x	Multi-Cd Strobe
	RSSR-24MCC		x	Multi-Cd Strobe
	RSSWPA-2475W		x	Strobe Weatherproof
	RSSWPA-24MCCH		x	Strobe Weatherproof
	RSSWPG-24MCCH		x	Strobe Weatherproof
	RSSWPR-24MCCH		x	Strobe Weatherproof
	RSSWP-2475W		x	Strobe Weatherproof
	RSSWP-2475C		x	Strobe Weatherproof
	RSSWP-24MCWH		x	Strobe Weatherproof
	ZRS-MCWH		x	Strobe
	ZRS-24MCC		x	Strobe
	ZRS-24MCCH		x	Strobe
	MB-G6-24	x		Motor Bell
	MB-G10-24	x		Motor Bell
	MB-G6-12	x		Motor Bell
	MB-G10-12	x		Motor Bell
	MIZ-24-R	x		Mini-Horn
	MT-12/24-R	x	x	Multitone Horn
	MT4-12/2z	x	x	Multitone Horn
	ZRS-MCW		x	Strobe
	MTWPR-24MCCH	x	x	Multitone Horn Strobe
	NH-12/24R	x		Horn
	HSR		x	Horn/Strobe
	HSW		x	Horn/Strobe
	STR		x	Strobe
	STW		x	Strobe
	HNR		x	Horn
	HNW		x	Horn

Table A.8 Compatible Notification Appliances

A.2 Two-Wire Smoke Detectors

Table A.9 lists two-wire smoke detectors that are compatible with the fire control panel. The table is organized by manufacturer. The columns show the number of detectors per loop that can be used..

	IFP-75
Identifier	24H
Operating Voltage Range	18.5–27.4 VDC

NOTE: The maximum number of smoke detectors per zone is determined by both the current draw and the impedance of the smoke detector. If too many smoke detectors are used on any zone, false alarms could occur.

- Do not mix different models of detectors on any zone; false alarms could occur.
- Do not mix detectors of different models unless the system is specifically intended to be installed in that configuration.
- Control unit Smoke Reset Time must be programmed for a number greater than or equal to the maximum reset time of the smoke detector

Manufacturer	Model Name or Number *(Base model name or number in parentheses.)*	Compatibility ID		# per Loop
		Head	Base	
Apollo	55000-350 (45681-200)	55000-350	45681-200	24 / loop
	55000-250 (45681-200)	55000-250	45681-200	24 / loop
	55000-225	55000-225	45681-255, 256, 45681-200, 220, 230, 232, 251,252	
	55000-226	55000-226		
	55000-227	55000-227		
	55000-325	55000-325		
	55000-328	55000-328		
	55000-326	55000-326		
	55000-327	55000-327		
ESL	429C (S10A)	N/A	S10A	30 / loop
	429CRT (S11A)	N/A	S11A	30 / loop
	429CST (S11A)	N/A	S11A	30 / loop
	429CT (S10A)	N/A	S10A	30 / loop
	609U01-11	S10	S00	40 / loop
	609U02-11	S10	S00/S03	40 / loop
	611U (601U or 602U)	S10	S00/S03	40 / loop
	611UD (601U or 602U)	S10	S00/S03	40 / loop
	611UT (601U or 602U)	S10	S00/S03	40 / loop
	612U (601U or 602U)	S10	S00/S03	40 / loop
	612UD (601U or 602U)	S10	S00/S03	40 / loop
	711U (701E or 701U)	N/A	S10A	25 / loop
	712U (701E or 701U)	N/A	S10A	25 / loop
	713-5U (702E or 701U)	N/A	S10A	25 / loop
	713-6U (702E or 701U)	N/A	S10A	25 / loop
	721-U (S10A)	N/A	S10A	30 / loop
	721-UT (S10A)	N/A	S10A	30 / loop
Falcon	525	FDT1	N/A	17 / loop
	525T	FDT1	N/A	17 / loop
Hochiki	SIH-24F (HS-224D OR HSD-224)	HD-3	HB-5	25 / loop
	SLK-24F (HS-224D)	HD-3	HB-5	25 / loop
	SLK-24FH (HS-224D)	HD-3	HB-5	25 / loop
System Sensor	1400	A	N/A	20 / loop
	1451 (B401B)	A	A	20 / loop
	2100	A	N/A	20 / loop
	2100T	A	N/A	20 / loop
	2151 (B401)	A	N/A	16 / loop
	2151T (B401)	A	N/A	16 / loop
	2300T	A	N/A	20 / loop
	2300	A	N/A	20 / loop
	2300TB	A	N/A	20 / loop
	2400	A	N/A	20 / loop
	2400 (DH400)	A	N/A	20 / loop
	2400AIT	A	N/A	20 / loop
	2400AT	A	N/A	20 / loop
	2400TH	A	N/A	20 / loop
	2451 (B401B)	A	N/A	20 / loop
	2451DH (DH 400)	A	N/A	20 / loop
	2451TH (B401B)	A	N/A	20 / loop

Table A.9 : Compatible Two-Wire Smoke Detectors

A.3 Four Wire Smoke Detectors/Devices (UL Listed

Smoke Detector/Base	Detector Type	Max Standby Current (mA)	Alarm Current (mA)
Fenwal CPD-7021 (w/70-201000-005 Base)	Ionization	0.10	*
Fenwal PSD-7125	Photoelectric	0.10	*
Fenwal PSD-7126 (w/70-201000-005 Base)	Photoelectric	0.10	*
Fire-Lite BLP-12-4W	Base	*	*
Gentex 824	Photoelectric	0.50	*
Gentex 824T	Photoelectric	0.50	*
Gentex 824CP	Photoelectric	0.50	*
Gentex 824CPT	Photoelectric	0.50	*
Hochiki HSC-4R	Base	*	*
Hochiki SPB-24	Projected Beam	0.25	*
System Sensor B112LP	Base	0.12	36
System Sensor B114LP	Base	*	*
System Sensor B404B	Base	*	*
System Sensor DH100ACDC	Photoelectric	0.15	0.70
System Sensor DH100ACDCLP	Photoelectric	0.15	0.70
System Sensor DH100ACDCLWP	Photoelectric	0.15	0.70
System Sensor DH400ACDCI	Ionization Duct	25	95
System Sensor DH400ACDCP	Photoelectric Duct	25	95
System Sensor 1112/24/D	Ionization	0.05	50
System Sensor 1424	Ionization	0.10	41
System Sensor 1451 (w/B402B Base)	Ionization	0.10	39
System Sensor 2112/24ATR	Photoelectric	0.50	60/70
System Sensor 2112/24AITR	Photoelectric	0.50	60/70
System Sensor 2112/24/D	Photoelectric	0.05	50
System Sensor 2112/24R	Photoelectric	0.50	60/70
System Sensor 2112/24TR	Photoelectric	0.50	60/70
System Sensor 2112/24T/D	Photoelectric w/135° Thermal	0.05	50
System Sensor 2112/24TSRB	Photoelectric w/135° Thermal Supervisory Relay	15	45
System Sensor 2312/24TB	Photoelectric	0.12	50
System Sensor 2412 (12 volt)	Photoelectric	0.12	77
System Sensor 2412AT (12 volt)	Photoelectric	0.12	58
System Sensor 2412TH (12 volt)	Photoelectric	0.12	77
System Sensor 2424	Photoelectric	0.10	41
System Sensor 2424TH	Photoelectric	0.10	41
System Sensor 2451	Photoelectric	0.10	39
System Sensor 2451TH (with/B402B Base)	Photoelectric	0.10	39
System Sensor 2W-MOD	Loop Test/Maintenance Mod.	30	50
System Sensor 4W-B (12/24 Volt)	Photoelectric I^3	.05	23
System Sensor4WT-B (12/24 Volt)	Photoelectric I^3 w/Therm	.05	23
System Sensor 4WTA-B (12/24 Volt)	I^3 Photo w/ Therm Sounder	.05	35
System Sensor 4WTR-B (12/24 Volt)	I^3 Photo w/ Therm/Relay	.05	35
System Sensor 4WTAR-B (12/24 Volt)	I^3 Photo w/ Therm/Sounder/Relay	.05	50
System Sensor 4WITAR-B (12/24 Volt)	I^3 Photo w/ Isolated Therm/Sounder/Relay	.05	50
System Sensor 2W-MOD2	I^3 Loop Test/Maintenance Mod.	.05	*

Table A.10 Compatible Four-Wire Smoke Detectors

Smoke Detector/Base	Detector Type	Max Standby Current (mA)	Alarm Current (mA)
System Sensor RRS-MOD	I^3 Reversing Relay/Sync Module	.05	*
System Sensor 6424	Projected Beam	10	28.4
System Sensor Beam 1224(S)	Projected Beam	17	38.5
* Contact manufacturer for current draws			

Table A.10 Compatible Four-Wire Smoke Detectors

A.4 Door Holders (UL Listed)

Table A.11 lists door holders that are compatible with the fire control panel

Manufacturer	Model	Type	Current (mA)
Edwards	DH150A	Floor Mount	96
Edwards	DH154A	Flush Mount	96
Edwards	DH158A	Surface Mount	96
Rixon Firemark	FM-980	Floor Mount, single	68
Rixon Firemark	FM-996	Surface Wiring	68
Rixon Firemark	FM-998	Concealed Wiring	68

Table A.11 Compatible Door Holders

A.5 Relays (UL Listed)

Table A.12 lists relays compatible with the fire control panel.

Manufacturer	Model	Current (mA)
Air Products & Controls, LTD	MR-101/C	15
	MR-201/C	35
	PAM-1	15
	PAM-2	15
	PAM-SD	15
System Sensor	A77-716B	20
	PR-1	15
	PR-2	30
	PR-3	30
	EOLR-1	30
	R-10T	23
	R-14T	23
	R-20T	40
	R-24T	40
	R-10E	23
	R-14E	23
	R-20E	40
	R-24E	40

Table A.12 Compatible Relays

A.6 Compatible 520Hz Signaling Speakers

Model Number	Description
SPR	Wall High-Fidelity Speaker, Red
SPW	Wall High-Fidelity Speaker, White
SPCR	Ceiling High-Fidelity Speaker, Red
SPCW	Ceiling High-Fidelity Speaker, White
SPSR	Wall High-Fidelity Speaker Strobe, Red
SPSRH	Wall High-Fidelity Speaker Strobe, High Candela, Red
SPSW	Wall High-Fidelity Speaker Strobe, White
SPSCR	Ceiling High-Fidelity Speaker Strobe, Red
SPSCW	Ceiling High-Fidelity Speaker Strobe, White
SPSCWH	Ceiling High-Fidelity Speaker Strobe, High Candela, White
SPSCRH	Ceiling High-Fidelity Speaker Strobe, High Candela, Red
SPSCW-CLR-ALERT	Ceiling High-Fidelity Speaker Strobe, Clear Lens, ALERT, White
SPSCW-P	Ceiling High-Fidelity Speaker Strobe, Plain, White
SPSCWH-P	Ceiling High-Fidelity Speaker Strobe, High Candela, Plain, White
SPSR-P	Wall High-Fidelity Speaker Strobe, Plain, Red
SPSRH-P	Wall High-Fidelity Speaker Strobe, High Candela, Plain, Red
SPSCWH-P	Ceiling High-Fidelity Speaker Strobe, High Candela, Plain, White
SPSW-ALERT	Wall High-Fidelity Speaker Strobe, Amber Lens, ALERT, White
SPSW-CLR-ALERT	Wall High-Fidelity Speaker Strobe, Clear Lens, ALERT, White
SPSW-P	Wall High-Fidelity Speaker Strobe, Plain, Red
SPSWH	Wall High-Fidelity Speaker Strobe, High Candela, White
SPSWH-P	Wall High-Fidelity Speaker Strobe, High Candela, Plain, Red
SPRL	Wall High-Fidelity Speaker, Red
SPWL	Wall High-Fidelity Speaker, White
SPCRL	Ceiling High-Fidelity Speaker, Red
SPCWL	Ceiling High-Fidelity Speaker, White
SPSCRL	Ceiling High-Fidelity Speaker Strobe, Red
SPSCWL	Ceiling High-Fidelity Speaker Strobe, White
SPSRL	Wall High-Fidelity Speaker Strobe, Red
SPSRL-SP	Wall High-Fidelity Speaker Strobe - FUEGO
SPSWL	Wall High-Fidelity Speaker Strobe, White
SPSCWL-P	Ceiling High-Fidelity Speaker Strobe, Standard, White, Plain
SPSRL-P	Ceiling High-Fidelity Speaker Strobe, Standard, Red, Plain
SPSWL-P	Wall High-Fidelity Speaker Strobe, Standard, White, Plain
SPSCWL-CLR-ALERT	Ceiling High-Fidelity Speaker Strobe, Clear Lens, Standard, White, ALERT
SPSWL-ALERT	Wall High-Fidelity Speaker Strobe, Amber Lens, ALERT, White
SPSWL-CLR-ALERT	Wall High-Fidelity Speaker Strobe, Clear Lens, Standard, ALERT, White
*F=FIRE, P=PLAIN, AL=ALERT, AG=AGENT, EV=EVAC, SP=FUEGO, PG=FOGO	

Table A.13 520Hz Speakers

A.7 Compatible 520Hz Low Frequency Bases

Model Number	Description
B200S-LF-WH / IV	Low Frequency Intelligent Sounder Base
B200SR-LF-WH / IV	Low Frequency Intelligent Sounder Base
Color Guide: -IV = Ivory color, -WH = White	

Table A.14 Low Frequency Bases

Appendix B: Editing Text Using the Built-In Programmer

This section contains tables of programmable characters that may be used for device, module, site, template, group, and zone names. T9 style editing is used.

B.8 Characters Used for Editing Text

Table B.15 lists the available characters and their associated numeric designator. When programming:

1. Use the Up or Down arrow key to scroll to the mode wanted.
2. Press the number shown in Table B.15 until the character wanted is shown.
3. Arrow left and right for position, and press enter to accept.

Lower Case Letters			
abc1	def2	ghi3	jkl4
mno5	pqr6	stu7	vwx8
yz9	Spc0		
Upper Case Letters			
ABC1	DEF2	GHI3	JKL4
MNO5	PQR6	STU7	VWX8
YZ9	Spc0		
Numbers and Special Characters			
1 [ ]1	2 ( )2	3 . ,3	4 : ; 4
5 ’ "5	6 ? !6	7 ‘ /7	8 – +8
9 = -9	0 0	* & @ *	# $ #

Table B.15 : Character Table

B.9 Example Name Edit

1. Press the up or down arrow to select upper case letters mode, Press 2 until “F” appears.
2. Press the up or down arrow to change mode to lower case letters, Press 3 until “i” appears.
3. Press 6 until “r” appears.
4. Press 2 until “e” appears.
5. Press 0 to space, then continue to next word using the same process.
6. Press ENTER to accept.

NOTE: After three seconds of no change, letter will automatically be accepted. Also pressing next number will automatically accept previous choice

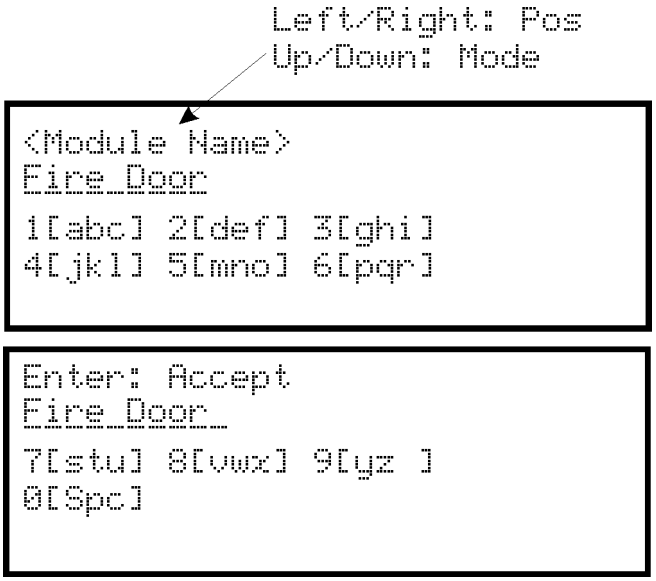

Figure B.104 Edit Name Example

Appendix C: Expanded Receiver/Panel Relationship

The available receiver number will correspond with what panel number you entered. Receiver numbers are populated based on panel number and audited to allow only the 4 appropriate receivers. See Section 6.2.6.

Panel	Available receiver numbers			
1	1	2	3	4
2	5	6	7	8
3	9	10	11	12
4	13	14	15	16
5	17	18	19	20
6	21	22	23	24
7	25	26	27	28
8	29	30	31	32
9	33	34	35	36
10	37	38	39	40
11	41	42	43	44
12	45	46	47	48
13	49	50	51	52
14	53	54	55	56
15	57	58	59	60
16	61	62	63	64
17	65	66	67	68
18	69	70	71	72
19	73	74	75	76
20	77	78	79	80
21	81	82	83	84
22	85	86	87	88
23	89	90	91	92
24	93	94	95	96
25	97	98	99	100
26	101	102	103	104
27	105	106	107	108
28	109	110	111	112
29	113	114	115	116
30	117	118	119	120
31	121	122	123	124
32	125	126	127	128

Table C.16 Receiver/panel relationship

Appendix D: Cadence Patterns

The cadence patterns shown below are available for use with the control panel.

#	Name	Pattern Description — Patterns repeat until condition is cleared.
00	Constant	Continuous sound Note: This is the only pattern that can be used for relay circuits. The system will override any other choice.
01	March Code	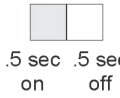
02	ANSI 3.41	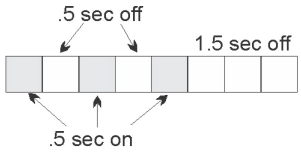
03	Single Stroke	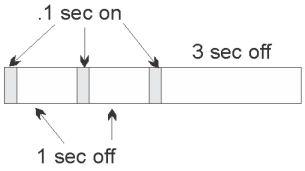
04	California	
05 : 16	Zone Coded **Pattern# / Zone** 5 Zone 1 6 Zone 2 7 Zone 3 8 Zone 4 9 Zone 5 10 Zone 6 11 Zone 7 12 Zone 8 13 Custom 1 14 Custom 2 15 Custom 3 16 Custom 4	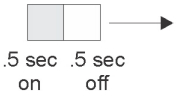 **EXAMPLE:** Pattern 06, Zone 2 coded 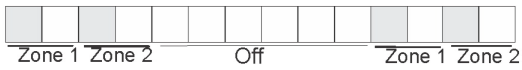
17 . . . 21	**Pattern # / Sync Type** 17 Faraday- not allowed 18 Gentex 19 System Sensor 20 Wheelock 21 Amesco	These outputs provide synchronization for AMSECO, Gentex, System Sensor, or Wheelock synchronized appliances.
22	Power Isolated	Disconnected, no voltage at terminals
23	Temporal 4	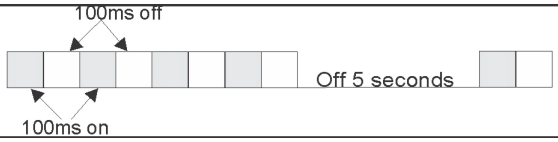

Panel Security

Panel installation / maintenance security checklist

System Description: _____

System Location: _____

Installer: _____ Date: _____

Complete the following Cyber security tasks for each panel Install

- Install the panel in a secure location considering both software and hardware vulnerabilities.
- Change the default password to a unique password
- Securely configure networks and firewalls
- Assess security risks
- Develop a Disaster and Recovery Plan
- Develop a Backup and Recovery Strategy
- Install, configure and keep anti virus software updated on all computers which access the panel
- Keep operating system updated on all computers which access the panel
- Deliver all required system information upon delivery to the system owner
- Train end-users on security maintenance tasks upon system delivery
- For decommissioning, dispose of data securely.
- Ensure the Ethernet cable is removed from the FACP when not being utilized for configuration or for reporting purposes.

Security and Data Protection

Communication Security - Level 1

Stored Data Security - Level 0

Physical Security - Level 1

Access Control Security - Level 1

Limited Warranty

Honeywell International Inc. warrants products manufactured by it to be free from defects in materials and workmanship for eighteen (18) months from the date of manufacture, under normal use and service. Products are date stamped at time of manufacture. The sole and exclusive obligation of **Honeywell International Inc.** is to repair or replace, at its option, free of charge for parts and labor, any part that is defective in materials or workmanship under normal use and service. All returns for credit are subject to inspection and testing at the factory before actual determination is made to allow credit. **Honeywell International Inc.** does not warrant products not manufactured by it, but assigns to the purchaser any warranty extended by the manufacturer of such products. This warranty is void if the product is altered or repaired by anyone other than **Honeywell International Inc.** or as expressly authorized by **Honeywell International Inc.** in writing, or is serviced by anyone other than **Honeywell International Inc.** or its authorized distributors. This warranty is also void if there is a failure to maintain the products and systems in which they operate in a proper and workable manner. In case of defect, secure a Return Material Authorization form from our Return Authorization Department.

This writing constitutes the only warranty made by **Honeywell International Inc.**, with respect to its products. **Honeywell International Inc.**, does not represent that its products will prevent any loss by fire or otherwise, or that its products will in all cases provide the protection for which they are installed or intended. Buyer acknowledges that **Honeywell International Inc.**, is not an insurer and assumes no risk for loss or damages or the cost of any inconvenience, transportation damage, misuse, abuse, accident or similar incident.

HONEYWELL INTERNATIONAL INC. GIVES NO WARRANTY, EXPRESS OR IMPLIED, OF MERCHANTABILITY, FITNESS FOR ANY PARTICULAR PURPOSE, OR OTHERWISE WHICH EXTENDS BEYOND THE DESCRIPTION ON THE FACE HEREOF. UNDER NO CIRCUMSTANCES SHALL **HONEYWELL INTERNATIONAL INC.** BE LIABLE FOR ANY LOSS OF OR DAMAGE TO PROPERTY, DIRECT, INCIDENTAL OR CONSEQUENTIAL, ARISING OUT OF THE USE OF, OR INABILITY TO USE **HONEYWELL INTERNATIONAL INC.**'S PRODUCTS. FURTHERMORE, **HONEYWELL INTERNATIONAL INC.** SHALL NOT BE LIABLE FOR ANY PERSONAL INJURY OR DEATH WHICH MAY ARISE IN THE COURSE OF, OR AS A RESULT OF, PERSONAL, COMMERCIAL OR INDUSTRIAL USE OF ITS PRODUCTS.

This warranty replaces all previous warranties and is the only warranty made by **Honeywell International Inc**. No increase or alteration, written or verbal, of the obligation of this warranty is authorized.

Honeywell

Model IFP-75 Basic Operating Instructions

These Instructions must be framed and displayed next to the IFP-75 panel in accordance with NFPA 72 fire code for Local Protected Fire Alarm Systems. Test the system in accordance to NFPA 72.

Operation	Task to Perform
Silence Alarms and Troubles	Press SILENCE then enter a code if prompted. Silence LED will light.
Reset Alarms	Press RESET then enter a code if prompted.
View Alarms, Supervisories, and Troubles	Press up or down arrow to view Alarms, Supervisories, or Trouble 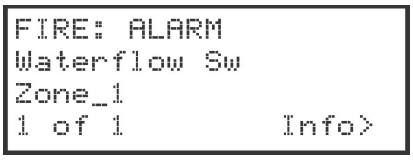
View a Points Status	1. Press ENTER to access Main Menu, then enter a code if prompted. 2. Press 2 to select Point Functions. 3. Select the module the device is located on by using the up or down arrow. Then press ENTER. 4. Enter the point number.
Conduct a Fire Drill	1. Press ENTER to access Main Menu, then enter a code if prompted. 2. Press 1 to select System Tests, then press 1 to select Fire Drill. 3. Press ENTER to start the fire drill. Press ENTER to end the fire drill.
Check Detector Sensitivity	1. Press ENTER to access Main Menu. 2. Press 2 for Point Status. 3. From the list that displays, select the SLC module where the point you want to view is located. 4. The fourth line of the display shows the sensitivity status. “NORMAL” means the detector is in compliance with NFPA 72. “CAL MAINT” means the detector is in compliance with NFPA 72 but maintenance should be performed soon. “CAL TRBLE” means the detector is not in compliance with NFPA 72.
Set Time and Date	1. Press ENTER to access Main Menu, then enter a code if prompted. 2. Press 4 to select Set Time & Date. Enter a code if prompted. Make changes in the fields on the screen as necessary. 3. Press ENTER if you wish to keep the changes. Press ENTER to set the entered time and date.
Enable / Disable a Point	1. Rotate the key or enter a code to access to access Main Menu. 2. Press 2 to select Point Functions. 3. Press 1 to select Disable / Enable Point. 4. Press 7 to Disable / Enable Pt. 5. Use the up or down arrow to move through the list. Then press ENTER to select the module where the point you want to disable/enable is located. 6. Enter the point or circuit number that you want to disable/enable. 7. Press the right arrow key to toggle between NORMAL (enable) or DISABLE.
View Event History	1. Press ENTER to access Main Menu, then enter a code if prompted. 2. Press 3 to select Event History. 3. Press the up or down arrow to view events in the history buffer.
For Service Call:	

PN LS10165-001SK-E Rev A ECN 16-0218

Cut Along the Dotted Line

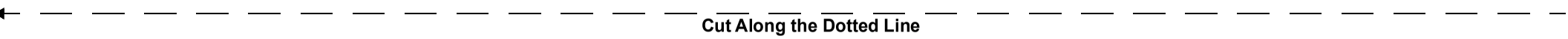
Cut Along the Dotted Line

Honeywell Security & Fire
12 Clintonville Road
Northford, CT 06472-1610
203-484-7161
www.farenhyt.com

LS10147-001SK-E | B | 10/17
©2018 Honeywell International Inc.

Honeywell